Datasheet

GLC-SX-MM-FL

1G, SFP, Duplex LC, 850nm, MMF, 550m, COM

Quick Spec

Rate Category:	1G
Form Factor:	SFP
Interface Type:	1000BASE-SX
Standard/Protocol:	IEEE 802.3z 1000BASE-SX
TX Wavelength:	850nm
RX Wavelength:	850nm
Cable Type:	MMF
Reach:	550m(OM2), 1km(OM3/OM4)
DDM:	Supported
Connector Type:	Duplex LC (UPC)
Power Consumption:	< 1.0 W
Operating Temperature:	0°C to +70°C (COM)

Overview

The FluxLight GLC-SX-MM-FL is a hot-pluggable 1000BASE-SX SFP transceiver that delivers Gigabit Ethernet connectivity over multimode fiber. It pairs an 850 nm VCSEL transmitter with a PIN photodiode receiver to provide an 8 dB optical link budget, supporting distances up to 550 m on OM2 and up to 1 km on OM3/OM4/OM5 multimode fiber. The module presents a duplex LC interface and an AC-coupled CML high-speed data path, while an LVTTL/I²C control interface supports full digital diagnostic monitoring (DDM/DOM per SFF-8472) of temperature, supply voltage, laser bias current, and transmitted/received optical power. Operating from a single +3.3 V supply at under 1 W and fully compliant with the SFP MSA (SFF-8074i), each GLC-SX-MM-FL is programmed for 100% compatibility with the target OEM platform and is backed by a FluxLight lifetime warranty.

Features

- Up to 1.25 Gb/s data rate for Gigabit Ethernet
- Compliant with IEEE 802.3z 1000BASE-SX
- 850 nm VCSEL transmitter and PIN photodiode receiver
- For multimode fiber (MMF): up to 550 m (OM2), 275 m (OM1), 1 km (OM3/OM4/OM5)
- Duplex LC connector; hot-pluggable SFP footprint
- Extinction ratio ≥ 9 dB; 8 dB optical link budget
- Digital Diagnostics Monitoring (DDM/DOM) per SFF-8472
- SFP MSA (SFF-8074i) compliant
- AC-coupled CML data interface; single +3.3 V supply, < 1 W
- Class 1 laser safety (IEC/EN 60825-1); RoHS-compliant and lead-free
- 100% compatible with and programmed for the target OEM platform
- Backed by a FluxLight lifetime warranty

Applications

- Gigabit Ethernet over multimode fiber (1000BASE-SX)
- Data center switch-to-switch and switch-to-server links
- Enterprise LAN and intra-building backbone connectivity
- Campus building risers and wiring-closet uplinks
- Short-reach aggregation and storage links within a facility

Absolute Maximum Rating

The operation in excess of any absolute maximum ratings might cause permanent damage to this module.

Parameter	Symbol	Min	Max	Unit
Storage Temperature	TS	-40	85	°C
Operating Case Temperature	TOP	0	70	°C
Power Supply Voltage	VCC	-0.3	3.6	V
Relative Humidity (non-condensation)	RH	5	85	%

Recommended Operating Conditions

Parameter	Symbol	Min	Typical	Max	Unit
Operating Case Temperature	TOP	0		70	°C
Power Supply Voltage	VCC	3.135	3.3	3.465	V
Power Consumption				1	W
Data Rate	DR		1.25		Gbps
Link Distance with MMF	D			550	m

Electrical and Optical Characteristics

Parameter	Symbol	Min	Typical	Max	Unit
Transmitter					
Center Wavelength	λC	840	850	860	nm
RMS Spectral Width	λrms			0.85	nm
Average Launch Power	PAVG	-9		-3	dBm
Rise/Fall Time	Tr/Tf			260	ps
Extinction Ratio	ER	9			dB
Transmitter Eye Mask		Compliant with IEEE 802.3 standard			
Receiver					
Center Wavelength	λC	770		860	nm
Damage Threshold	THd	0			dBm
Receiver Sensitivity	SEN			-17	dBm
LOS Assert	LOSA			-35	dBm
LOS De-Assert	LOSD			-18	dBm
LOS Hysteresis	LOSH	1			dB

Recommended Interface Circuit

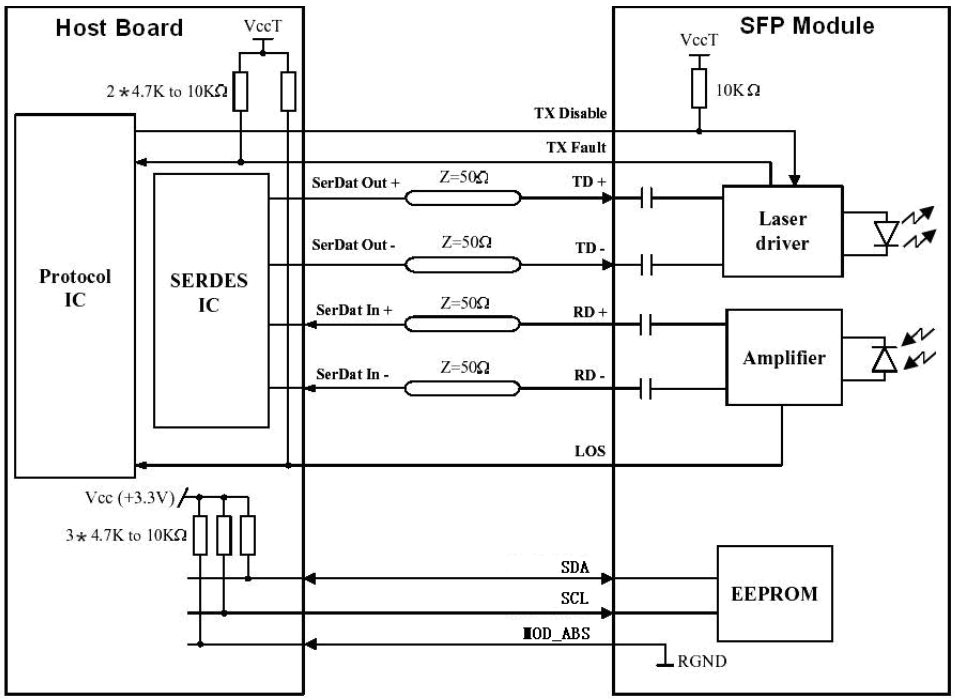

Digital Diagnostic Functions

The following digital diagnostic characteristics are defined over the normal operating conditions unless otherwise specified.

Parameter	Symbol	Min	Max	Unit
Temperature monitor absolute error	DMI_Temp	-5	5	°C
Supply voltage monitor absolute error	DMI_VCC	-0.1	0.1	V
Channel RX power monitor absolute error	DMI_RX_Ch	-3	3	dB
Channel Bias current monitor	DMI_Ibias_Ch	-10%	10%	mA
Channel TX power monitor absolute error	DMI_TX_Ch	-3	3	dB

Mechanical Dimensions

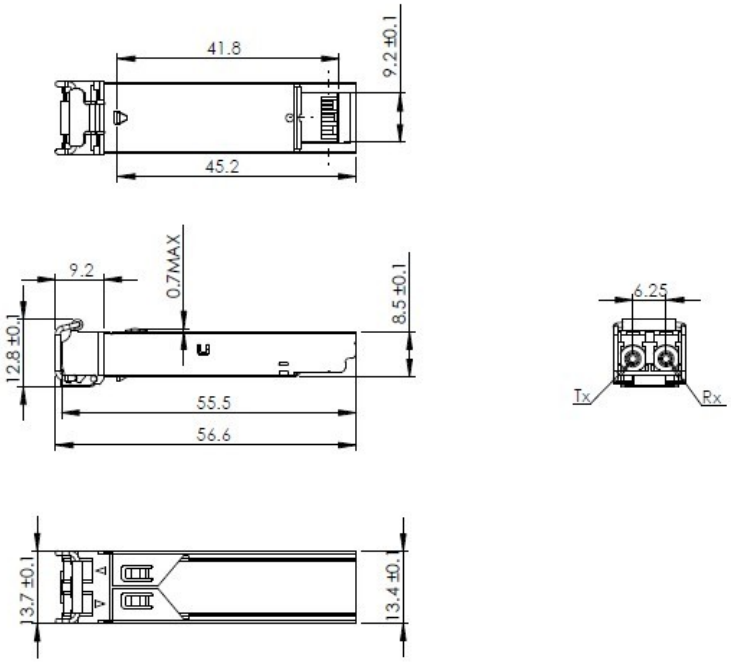

Units: mm

Pin Assignment and Description

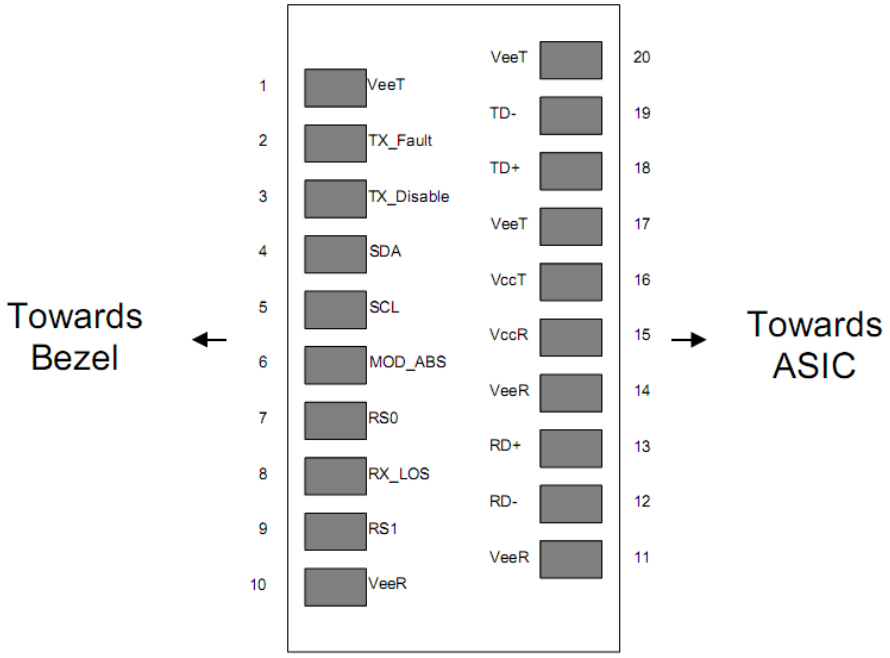

Pin	Signal Name	Description	Plug Seq.	Notes
1	VeeT	Transmitter Ground	1	1
2	TX FAULT	Transmitter Fault Indication	3	
3	TX DISABLE	Transmitter Disable	3	2
4	SDA	SDA Serial Data Signal	3	3
5	SCL	SCL Serial Clock Signal	3	3
6	MOD_ABS	Module Absent. Grounded within the module	3	3
7	RS0	Not Connected	3	4
8	LOS	Loss of Signal	3	5
9	RS1	Not Connected	3	4
10	VeeR	Receiver ground	1	1
11	VeeR	Receiver ground	1	1
12	RD-	Inv. Received Data Out	3	6
13	RD+	Received Data Out	3	6
14	VeeR	Receiver ground	1	1
15	VCCR	Receiver Power Supply	2	
16	VCCT	Transmitter Power Supply	2	
17	VeeT	Transmitter Ground	1	
18	TD+	Transmit Data In	3	6

Pin Assignment and Description (Continued)

Pin	Signal Name	Description	Plug Seq.	Notes
19	TD-	Inv. Transmit Data In	3	6
20	VeeT	Transmitter Ground	1	

Notes:

1. Circuit ground is internally isolated from chassis ground.
2. Laser output disabled on TDIS > 2.0V or open, enabled on TDIS < 0.8V.
3. Should be pulled up with 4.7–10 kΩ on the host board to a voltage between 2.0V and 3.6V. MOD_DEF(0) pulls the line low to indicate the module is plugged in.
4. Rate select is not used.
5. LOS is an open-collector output. Should be pulled up with 4.7–10 kΩ on the host board to a voltage between 2.0V and 3.6V. Logic 0 indicates normal operation; logic 1 indicates loss of signal.
6. AC coupled.

ESD

This transceiver is specified as ESD threshold 1kV for high-speed data pins and 2kV for all other electrical input pins, tested per MIL-STD-883, Method 3015.4 /JESD22-A114-A (HBM). However, normal ESD precautions are still required during the handling of this module. This transceiver is shipped in ESD protective packaging. It should be removed from the packaging and handled only in an ESD protected environment.

Laser Safety

This is a Class 1 Laser Product according to IEC 60825-1:2007. This product complies with 21 CFR 1040.10 and 1040.11 except for deviations pursuant to Laser Notice No. 50, dated (June 24, 2007).