Datasheet

3HE10551AA-FL

100G, QSFP28, MPO-12, 850nm, MMF, 70m/100m, COM

Quick Spec

Rate Category:	100G
Form Factor:	QSFP28
Interface Type:	100GBASE-SR4
Standard/Protocol:	IEEE 802.3bm 100GBASE-SR4
TX Wavelength:	850nm
RX Wavelength:	850nm
Cable Type:	MMF
Reach:	70m (OM3), 100m (OM4)
DDM:	Supported
Connector Type:	MPO-12 (Female, Flat/PC)
Power Consumption:	3.5W max
Operating Temperature:	0°C to +70°C (COM)

Overview

The FluxLight 3HE10551AA-FL is a high-performance, cost-effective 100G optical transceiver module designed for 100 Gigabit Ethernet links over parallel multimode fiber. It transmits four independent 25.78 Gbps lanes from an 850 nm VCSEL array and receives on a matched PIN photodiode array, aggregating to 100 Gbps across an 8-fiber MPO-12 interface. Fully compliant with the QSFP28 MSA, SFF-8636 digital diagnostic monitoring (DDM/DOM), IEEE 802.3bm 100GBASE-SR4, and Class 1 laser safety standards, it delivers reliable, low-power connectivity up to 70 m over OM3 and 100 m over OM4 multimode fiber (with RS-FEC).

Features

- Hot-pluggable QSFP28 footprint with MPO-12 (female) receptacle
- Compliant with IEEE 802.3bm 100GBASE-SR4
- Four-lane 4 × 25.78125 Gbps (NRZ) design; 100 Gbps aggregate
- 850 nm VCSEL array transmitter and PIN photodiode array receiver
- Parallel multimode fiber over 8-fiber MPO-12; up to 70 m (OM3) / 100 m (OM4)
- Average launch power −8.4 to +2.4 dBm per lane; stressed receiver sensitivity −5.2 dBm (OMA) per lane
- RS-FEC required for full-reach operation
- Real-time Digital Diagnostic Monitoring (DDM/DOM) per SFF-8636
- Single +3.3V power supply, 3.5 W max power dissipation
- QSFP28 MSA compliant, RoHS-6 compliant, and Class 1 laser eye safety certified (IEC/EN 60825-1)
- 100% compatible with and programmed for the target OEM platform
- Backed by a FluxLight lifetime warranty

Applications

- 100 Gigabit Ethernet over parallel multimode fiber (100GBASE-SR4)
- Data center short-reach interconnect (spine-leaf, ToR/EoR, switch-to-switch)
- High-density 100G switch and router uplinks / aggregation
- 4 × 25G breakout to 25GBASE-SR (SFP28) via MPO-to-LC breakout cabling

Absolute Maximum Rating

The operation in excess of any absolute maximum ratings might cause permanent damage to this module.

Parameter	Symbol	Min	Max	Unit
Storage Temperature	TS	-40	85	°C
Power Supply Voltage	VCC	0	3.6	V
Relative Humidity	RH	15	85	%

Recommended Operating Conditions

Parameter	Symbol	Min	Typical	Max	Unit	Notes
Operating Case Temperature	TOP	0		70	°C	
Supply Voltage	VCC	3.135	3.3	3.465	V	
Data Rate (Each Lane)	DR		25.78125		Gb/s	
Power Consumption	PC			3.5	W	
Link Distance with OM3	D			70	m	Require RS-FEC in host platform
Link Distance with OM4	D			100	m	Require RS-FEC in host platform

Electrical Characteristics

The following electrical characteristics are defined over the Recommended Operating Environment unless otherwise specified.

Parameter	Symbol	Min	Typical	Max	Unit
Differential Data Input Swing	VIN	100		900	mV
Input Differential Impedance	Zin		100		Ω
Transmitter Disable Voltage	VD	2.0		Vcc	V
Transmitter Enable Voltage	VEN	0		0.8	V
Differential Data Output Swing	VOUT	300	600	900	mV
Output Differential Impedance	Zout		100		Ω
LOS Assert Voltage	VLOSA	2.0		Vcc	V
LOS De-assert Voltage	VLOSD	0		0.8	V

Optical Characteristics

Parameter	Symbol	Min	Typical	Max	Unit	Notes
Transmitter						
Average Output Power, each lane	POUT	-8.4		2.4	dBm	
Optical Modulation Amplitude, each lane	OMA	-6.4		3	dBm	
Extinction Ratio	ER	2			dB	
Average Output Power (Laser Off)	POFF			-30	dBm	
Center Wavelength	λ	840	850	860	nm	
RMS Spectral Width	σλ			0.6	nm	
Optical Return Loss Tolerance	ORLT			12	dB	
Transmitter eye mask definition {X1,X2,X3,Y1,Y2,Y3}, Hit ratio 1.5×10^{-3} hits/sample			{0.3, 0.38, 0.45, 0.35, 0.41, 0.5}			
Receiver						
Average Receive Power, each lane	Pin	-10.3		2.4	dBm	
Unstressed Receiver Sensitivity (OMA), each lane	Sen			-7.2	dBm	BER = 5E-5, measured with PRBS $2^{31}-1$ at 25.78Gb/s
Stressed Receiver Sensitivity (OMA), each lane	SRS			-5.2	dBm	Per IEEE 802.3bm; conformance test signal, BER 5E-5 with RS-FEC
Receiver Damage Threshold, per Lane	PRdmg	3.4			dBm	
Center Wavelength	λ	840	850	860	nm	
Receiver Reflectance	RFL			-12	dB	
LOS Assert	LOSA	-30			dBm	

Optical Characteristics (Continued)

Parameter	Symbol	Min	Typical	Max	Unit	Notes
LOS De-Assert	LOSD			-13	dBm	
LOS Hysteresis	LOSH	0.5	2	6	dB	

Block Diagram of Transceiver

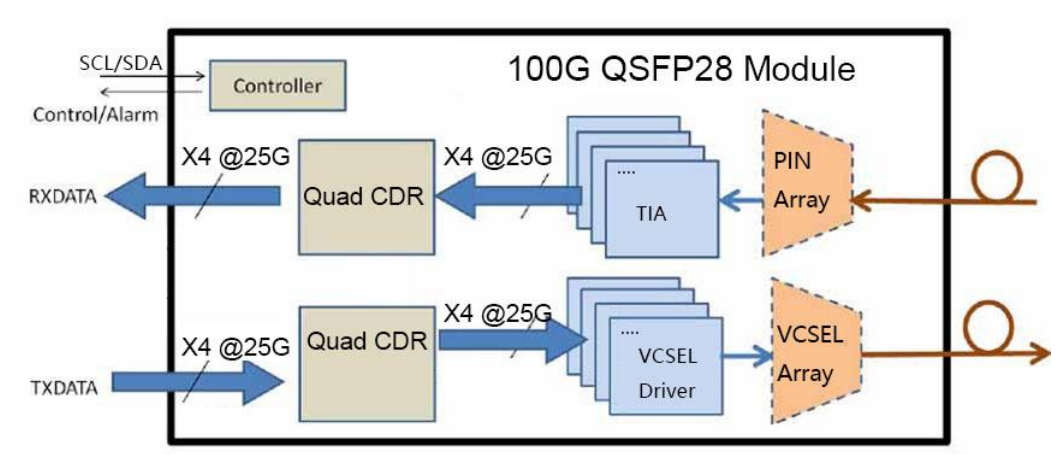

Digital Diagnostic Functions

The following digital diagnostic characteristics are defined over the normal operating conditions unless otherwise specified.

Parameter	Symbol	Min	Max	Unit
Temperature monitor absolute error	DMI_Temp	-5	5	°C
Supply voltage monitor absolute error	DMI_VCC	-0.1	0.1	V
Channel RX power monitor absolute error	DMI_RX_Ch	-3	3	dB
Channel bias current monitor absolute error	DMI_Ibias_Ch	-10%	10%	mA
Channel TX power monitor absolute error	DMI_TX_Ch	-3	3	dB

Mechanical Dimensions

Units: mm

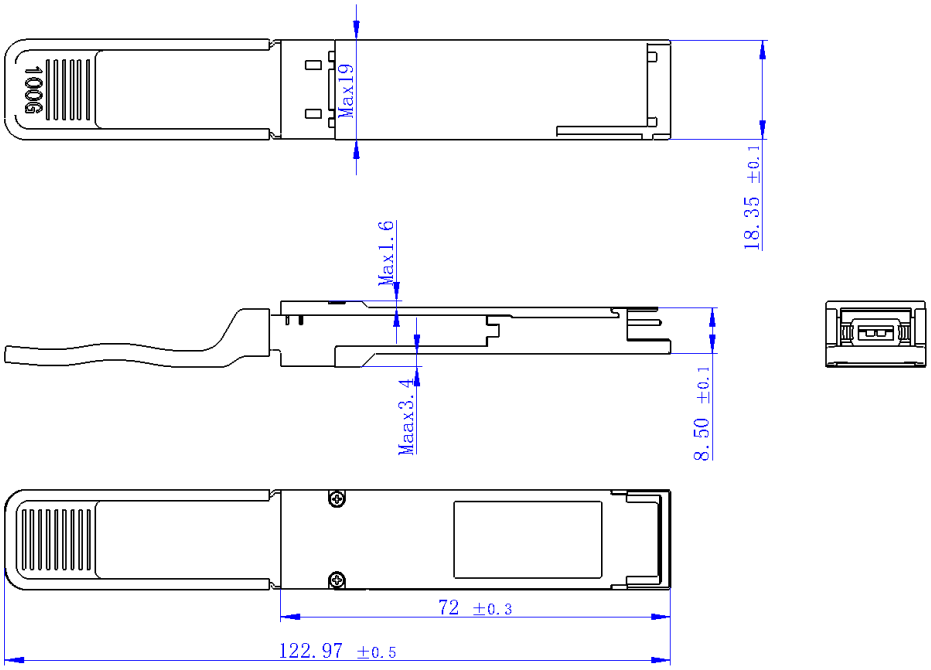

Pin Assignment and Description

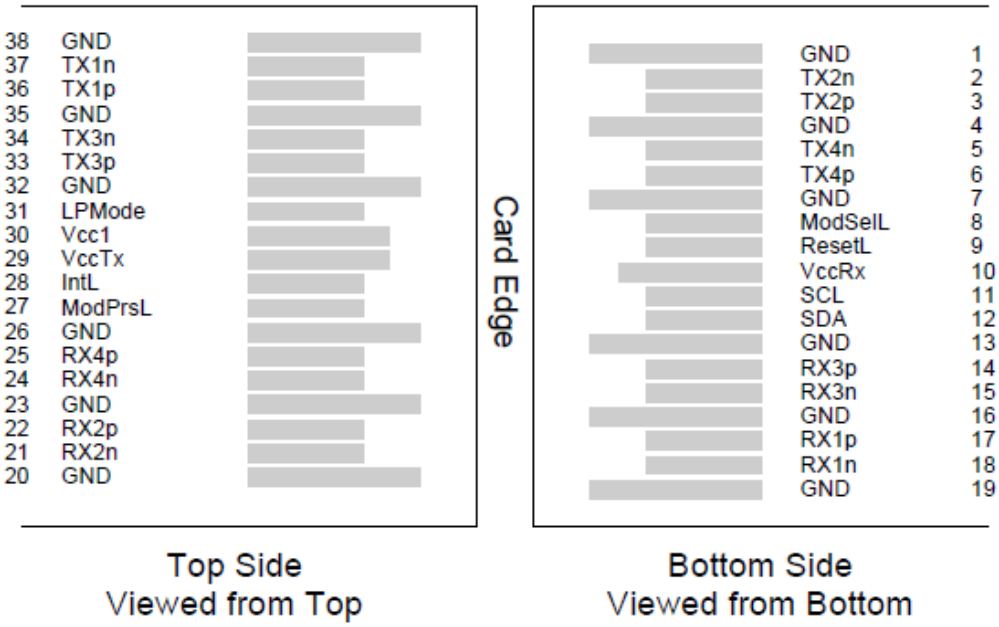

Pin	Logic	Symbol	Description	Plug Sequence
1		GND	Ground	1
2	CML-I	Tx2n	Transmitter Inverted Data Input	3
3	CML-I	Tx2p	Transmitter Non-Inverted Data Input	3
4		GND	Ground	1
5	CML-I	Tx4n	Transmitter Inverted Data Input	3
6	CML-I	Tx4p	Transmitter Non-Inverted Data Input	3
7		GND	Ground	1
8	LVTTL-I	ModSelL	Module Select	3
9	LVTTL-I	ResetL	Module Reset	3
10		VccRx	+3.3V Power Supply Receiver	2
11	LVCMOS-I/O	SCL	2-Wire Serial Interface Clock	3
12	LVCMOS-I/O	SDA	2-Wire Serial Interface Data	3
13		GND	Ground	1
14	CML-O	Rx3p	Receiver Non-Inverted Data Output	3
15	CML-O	Rx3n	Receiver Inverted Data Output	3
16		GND	Ground	1
17	CML-O	Rx1p	Receiver Non-Inverted Data Output	3
18	CML-O	Rx1n	Receiver Inverted Data Output	3
19		GND	Ground	1
20		GND	Ground	1
21	CML-O	Rx2n	Receiver Inverted Data Output	3
22	CML-O	Rx2p	Receiver Non-Inverted Data Output	3
23		GND	Ground	1
24	CML-O	Rx4n	Receiver Inverted Data Output	3
25	CML-O	Rx4p	Receiver Non-Inverted Data Output	3
26		GND	Ground	1
27	LVTTL-O	ModPrsL	Module Present	3
28	LVTTL-O	IntL	Interrupt	3
29		VccTx	+3.3V Power Supply Transmitter	2
30		Vcc1	+3.3V Power Supply	2
31	LVTTL-I	LPMode	Low Power Mode	3
32		GND	Ground	1
33	CML-I	Tx3p	Transmitter Non-Inverted Data Input	3
34	CML-I	Tx3n	Transmitter Inverted Data Input	3

Pin Assignment and Description (Continued)

Pin	Logic	Symbol	Description	Plug Sequence
35		GND	Ground	1
36	CML-I	Tx1p	Transmitter Non-Inverted Data Input	3
37	CML-I	Tx1n	Transmitter Inverted Data Input	3
38		GND	Ground	1

ESD

This transceiver is specified as an ESD threshold of 1kV for the high-speed data pins and 2kV for all other electrical input pins, tested per MIL-STD-883, Method 3015.4 / JESD22-A114-A (Human Body Model). However, normal ESD precautions are still required during the handling of this module. This transceiver is shipped in ESD-protective packaging. It should be removed from the packaging and handled only in an ESD-protected environment.

Laser Safety

This is a Class 1 Laser Product according to IEC 60825-1:2007. This product complies with 21 CFR 1040.10 and 1040.11 except for deviations pursuant to Laser Notice No. 50, dated (June 24, 2007).