Cisco Compatible SFP-25G-ER-S

Dual-LC, 1310nm, SMF, 40km

Quick Spec:

Part Number:	SFP-25G-ER-S SFP-25G-ER-S-EXT SFP-25G-ER-S-IND
Form Factor:	SFP28
TX Wavelength:	1310nm
Reach:	40km
Cable Type:	SMF
Rate Category:	25GBase
Interface Type:	ER
DDM:	Yes
Connector Type:	Dual-LC
Power Budget:	11.10 dB
TX Power Min/Max:	-3.00 to 3.00
RX Power Min/Max;	-14.10 to -1.00



Cisco Compatible SFP-25G-ER-S Features

- 25.78Gb/s bit rates
- Hot-Pluggable
- Duplex LC connector
- EML transmitter, APD photo-detector
- Up to 40km on SMF
- 2-wire interface for management specifications compliant with SFF 8472 digital diagnostic monitoring interface for optical transceivers
- Cost effective SFP28 solution, enables higher port densities and greater bandwidth
- Power Supply :+3.3V
- Low Power consumption<1.5W
- Operating case temperature Range: 0~ 70°C
- RoHS compliant
- Operating Case Temperature:
    - Standard: 0°C to +70 °C
    - Extended -5°C to +85 °C
    - Industrial -40°C to +85 °C

Cisco Compatible SFP-25G-ER-S Applications

- High-speed storage area networks
- Computer cluster cross-connect
- Custom high-speed data pipes
- Inter Rack Connection

Product Description

The SFP28 40KM transceivers is a very compact optical transceiver module converts 25Gbit/s serial CML electrical data into serial optical data compliant with the 25GBASE-ER standard. The SFP28 ER module electrical interface is compliant to SFI electrical specifications. The EML transmitter and APD receiver provide superior performance for Ethernet applications at up to 40km links on SMF.

The SFP28 ER Module compliant with SFF-8431, SFF-8432 and IEEE 802.3CC 25GBASE-ER. Digital diagnostics functions are available via a 2-wire serial interface, as specified in SFF-8472.

The fully SFP compliant form factor provides hot pluggability, easy optical port upgrades and low EMI emission.

Absolute Maximum Ratings

Parameter	Symbol	Min.	Typical	Max.	Unit
Storage Temperature	T_S	-40		+85	°C
Case Operating Temperature	T_A	0		70	°C
Maximum Supply Voltage	Vcc	0		3.6	V
Relative Humidity	RH	5		95	%

Electrical Characteristics (TOP = 0 to 70 °C, VCC = 3.135 to 3.465 Volts)

Parameter	Symbol	Min.	Typical	Max.	Unit	Note
Supply Voltage	Vcc	3.135		3.465	V	
Supply Current	Icc			450	mA	
Power Consumption	P			1.5	W	
Data Rate	R	-	25.78		Gb/s	
Transmitter Section:						
Input differential impedance	R_{in}		100		Ω	1
Tx Input Single Ended DC Voltage Tolerance (Ref VeeT)	V	-0.3		4	V	
Differential input voltage swing	Vin,pp	180		700	mV	2
Transmit Disable Voltage	V_D	2		Vcc	V	
Transmit Enable Voltage	V_{EN}	Vee		Vee+0.8	V	
Receiver Section:						
Single Ended Output Voltage Tolerance	V	-0.3		4	V	
Rx Output Diff Voltage	Vo	150		900	mV	
Rx Output Rise and Fall Time	Tr/Tf	9.5			ps	3
LOS Fault	$V_{LOS\ fault}$	2		Vcc_{HOST}	V	4
LOS Normal	$V_{LOS\ norm}$	Vee		Vee+0.8	V	4

Note:
1. Connected directly to TX data input pins. AC coupling from pins into laser driver IC.
2. Per SFF-8431 Rev 3.0
3. 20%～80%
4. LOS is an open collector output. Should be pulled up with 4.7k – 10kΩ on the host board. Normal operation is logic 0; loss of signal is logic 1. Maximum pull-up voltage is 5.5V.

Optical Characteristics (TOP = 0 to 70°C, VCC = 3.135 to 3.465 Volts)

Parameter	Symbol	Min.	Typical	Max.	Unit	Note
Transmitter Section:						
Center Wavelength	λt	1295		1310	nm	
spectral width	△λ			1	nm	
Average Optical Power	Pavg	-3.0		+6	dBm	1
Laser Off Power	Poff			-30	dBm	
Extinction Ratio	ER	4			dB	
Receiver Section:						
Center Wavelength	λr	1295		1325	nm	
Receiver Sensitivity(OMA)	Sen			-19	dBm	2
Stressed Sensitivity(OMA)	Sen_2			-16.5	dBm	2
Los Assert	LOS_A	-30			dBm	
Los Dessert	LOS_D			-11	dBm	
Los Hysteresis	LOS_H	0.5		5	dB	
Overload	Sat	-9			dBm	3
Receiver Reflectance	Rrx			-12	dB	

Note:
1. Average power figures are informative only, per IEEE802.3CC.
2. Conditions of stressed receiver tests per IEEE802.3CC. At 5E-5 BER.
3. Receiver overload specified in OMA and under the worst comprehensive stressed condition.

Timing Characteristics

Parameter	Symbol	Min.	Typical	Max.	Unit
TX_Disable Assert Time	t_off			100	us
TX_Disable Negate Time	t_on			2	ms
Time to Initialize Include Reset of TX_FAULT	t_int			300	ms
TX_FAULT from Fault to Assertion	t_fault			1	ms
TX_Disable Time to Start Reset	t_reset	10			us
Receiver Loss of Signal Assert Time	T_A,RX_LOS			100	us
Receiver Loss of Signal Deassert Time	T_d,RX_LOS			100	us
Rate-Select Chage Time	t_ratesel			10	us
Serial ID Clock Time	t_serial-clock			100	kHz

Pin Assignment:

Diagram of Host Board Connector Block Pin Numbers and Name

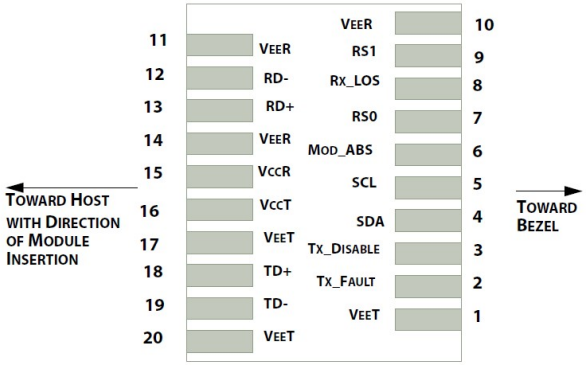

Pin Function Definitions

PIN #	Name	Function	Notes
1	VeeT	Module transmitter ground	1
2	Tx Fault	Module transmitter fault	2
3	Tx Disable	Transmitter Disable; Turns off transmitter laser output	3
4	SDL	2 wire serial interface data input/output (SDA)	4
5	SCL	2 wire serial interface clock input (SCL)	4
6	MOD-ABS	Module Absent, connect to VeeR or VeeT in the module	2
7	RS0	Rate select0, optionally control SFP+ receiver. When high, input data rate >4.5Gb/ s; when low, input data rate <=4.5Gb/s	
8	LOS	Receiver Loss of Signal Indication	
9	RS1	Rate select0, optionally control SFP+ transmitter. When high, input data rate >4.5Gb/s; when low, input data rate <=4.5Gb/s	
10	VeeR	Module receiver ground	1
11	VeeR	Module receiver ground	1
12	RD-	Receiver inverted data out put	
13	RD+	Receiver non-inverted data out put	
14	VeeR	Module receiver ground	1
15	VccR	Module receiver 3.3V supply	
16	VccT	Module transmitter 3.3V supply	
17	VeeT	Module transmitter ground	1
18	TD+	Transmitter non-inverted data out put	
19	TD-	Transmitter inverted data out put	
20	VeeT	Module transmitter ground	1

Note:
1. The module ground pins shall be isolated from the module case.
2. This pin is an open collector/drain output pin and shall be pulled up with 4.7K-10Kohms to Host_Vcc on the host board.
3. This pin shall be pulled up with 4.7K-10Kohms to VccT in the module.
4. This pin is an open collector/drain output pin and shall be pulled up with 4.7K-10Kohms to Host_Vcc on the host board.

Transceiver Block Diagram

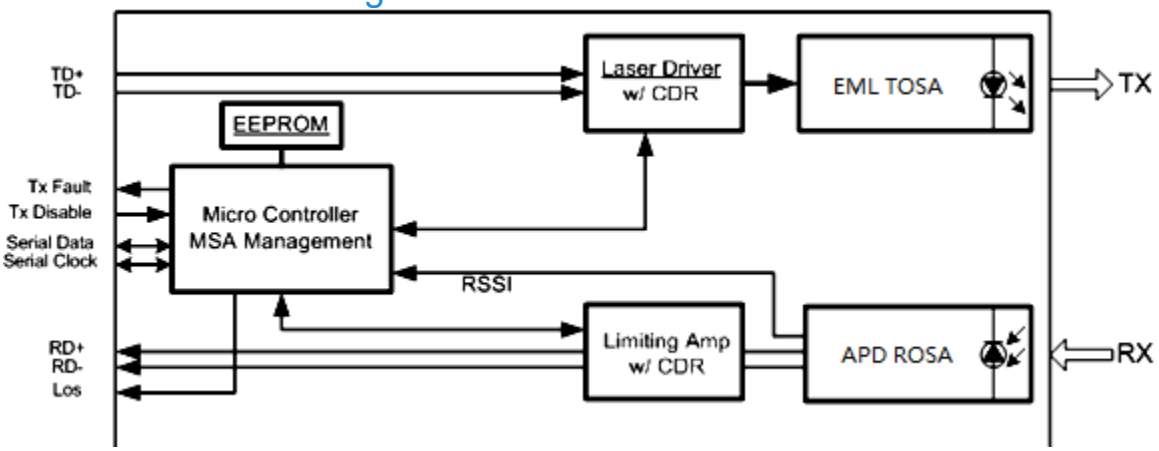

SFP Module EEPROM Information and Management

The SFP modules implement the 2-wire serial communication protocol as defined in the SFP -8472. The serial ID information of the SFP modules and Digital Diagnostic Monitor parameters can be accessed through the I²C interface at address A0h and A2h.
The memory is mapped in Table 1.
Detailed ID information (A0h) is listed in Table 2.
And the DDM specification at address A2h.
For more details of the memory map and byte definitions, please refer to the SFF-8472, “Digital Diagnostic Monitoring Interface for Optical Transceivers”. The DDM parameters have been internally calibrated.

Table 1. Digital Diagnostic Memory Map (Specific Data Field Descriptions)

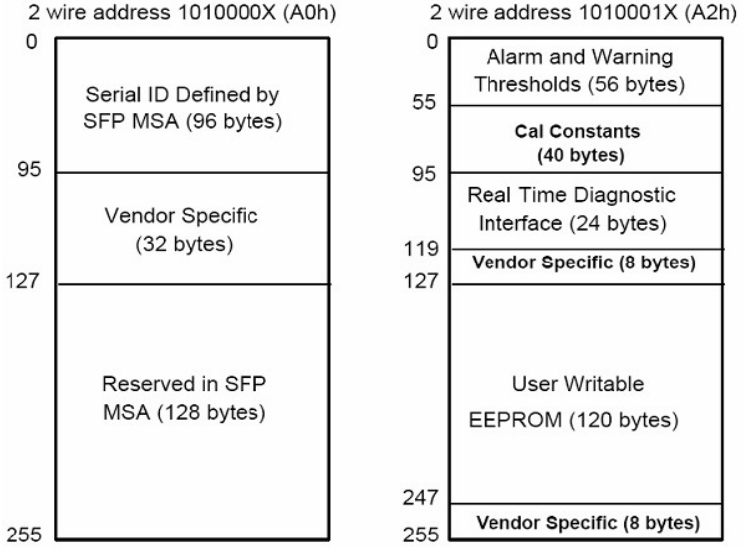

Table 2 - EEPROM Serial ID Memory Contents (A0h)

Data Address	Length (Byte)	Name of Length	Description and Contents
Base ID Fields			
0	1	Identifier	Type of Serial transceiver (03h=SFP)
1	1	Reserved	Extended identifier of type serial transceiver (04h)
2	1	Connector	Code of optical connector type (07=LC)
3-10	8	Transceiver	25G Base-ER
11	1	Encoding	64B/66B
12	1	BR, Nominal	Nominal baud rate, unit of 100Mbps
13-14	2	Reserved	(0000h)
15	1	Length(9um)	Link length supported for 9/125um fiber, units of 100m
16	1	Length(50um)	Link length supported for 50/125um fiber, units of 10m
17	1	Length(62.5um)	Link length supported for 62.5/125um fiber, units of 10m
18	1	Length(Copper)	Link length supported for copper, units of meters
19	1	Reserved	
20-35	16	Vendor Name	SFP vendor name: AOPTICS
36	1	Reserved	
37-39	3	Vendor OUI	SFP transceiver vendor OUI ID
40-55	16	Vendor PN	Part Number: “AOSP-25G-40” (ASCII)
56-59	4	Vendor rev	Revision level for part number
60-62	3	Reserved	
63	1	CCID	Least significant byte of sum of data in address 0-62
Extended ID Fields			
64-65	2	Option	Indicates which optical SFP signals are implemented (001Ah = LOS, TX_FAULT, TX_DISABLE all supported)
66	1	BR, max	Upper bit rate margin, units of %
67	1	BR, min	Lower bit rate margin, units of %
68-83	16	Vendor SN	Serial number (ASCII)
84-91	8	Date code	AOPTICS’s Manufacturing date code
92-94	3	Reserved	
95	1	CCEX	Check code for the extended ID Fields (addresses 64 to 94)
Vendor Specific ID Fields			
96-127	32	Readable	AOPTICS specific date, read only
128-255	128	Reserved	Reserved for SFF-8079

Digital Diagnostic Monitor Characteristics

Data Address	Parameter	Accuracy	Unit

96-97	Transceiver Internal Temperature	±3.0	°C
98-99	VCC3 Internal Supply Voltage	±3.0	%
100-101	Laser Bias Current	±10	%
102-103	Tx Output Power	±2.0	dBm
104-105	Rx Input Power	±2.0	dBm

Regulatory Compliance

The AOSP-25G-40 complies with international Electromagnetic Compatibility (EMC) and international safety requirements and standards (see details in Table following).

Electrostatic Discharge (ESD) to the Electrical Pins	MIL-STD-883E Method 3015.7	Class 1(>1000 V)
Electrostatic Discharge (ESD) to the Duplex LC Receptacle	IEC 61000-4-2 GR-1089-CORE	Compatible with standards
Electromagnetic Interference (EMI)	FCC Part 15 Class B EN55022 Class B (CISPR 22B) VCCI Class B	Compatible with standards
Laser Eye Safety	FDA 21CFR 1040.10 and 1040.11 EN60950, EN (IEC) 60825-1,2	Compatible with Class 1 laser product.

Recommended Circuit:

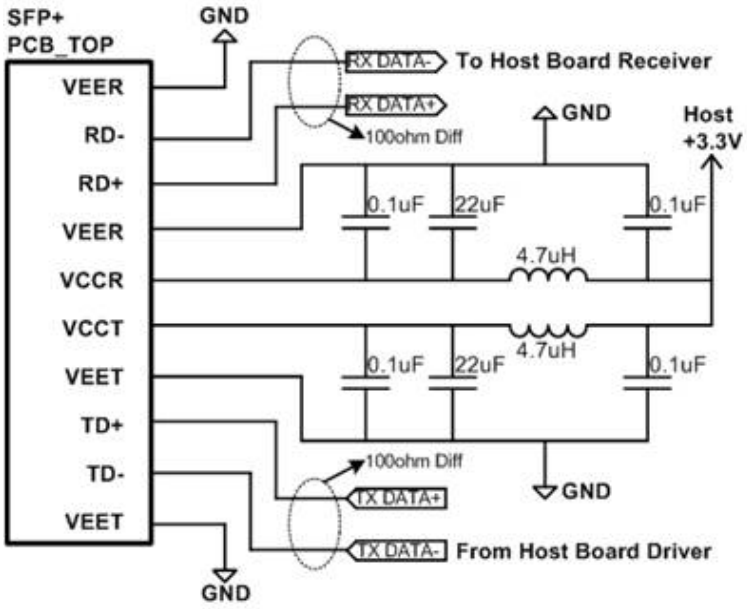

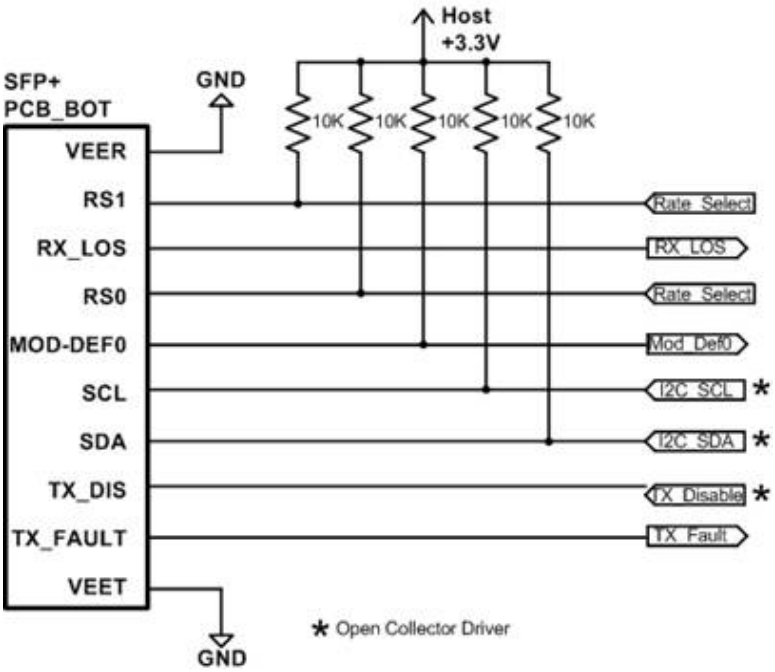

Recommended High-speed Interface Circuit

Mechanical Dimensions:

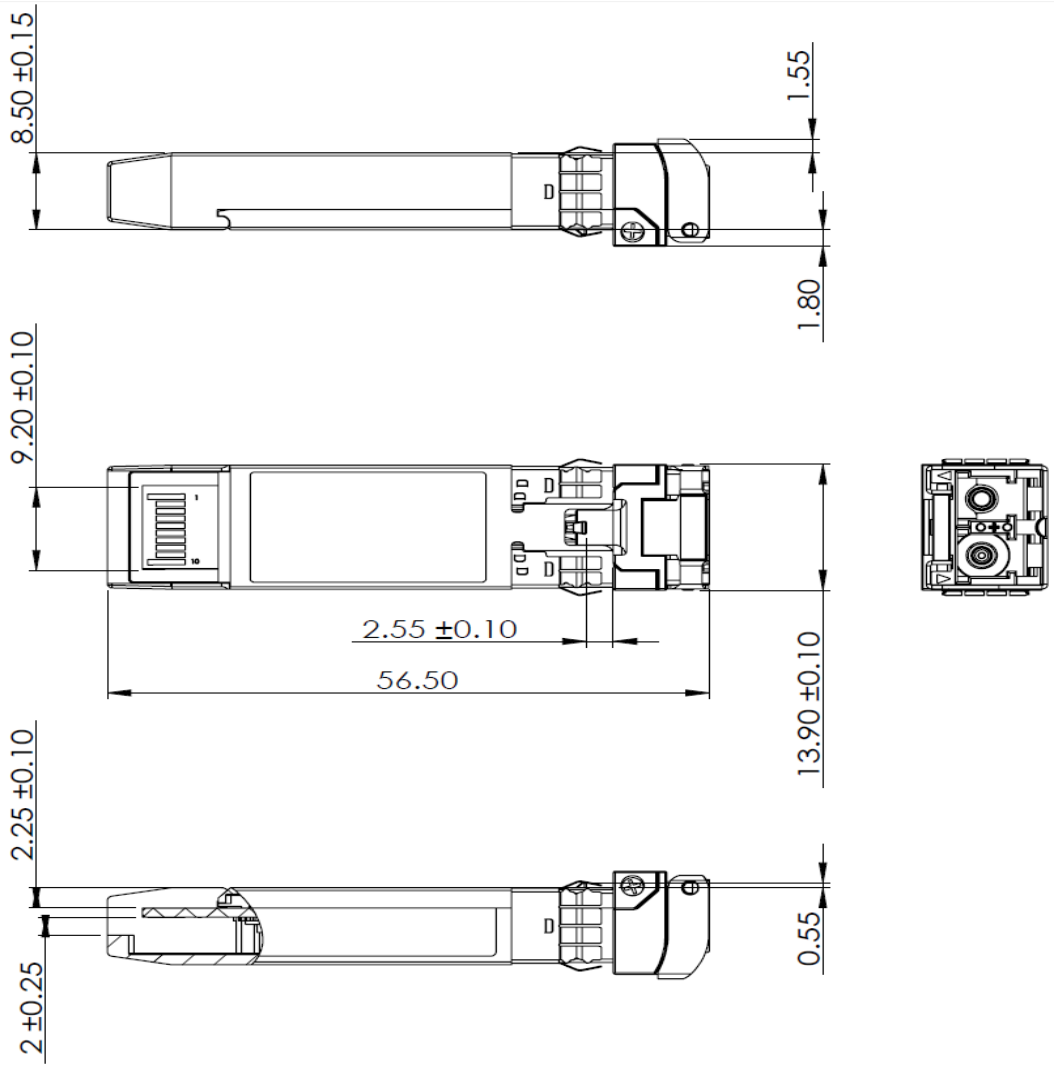

Warnings

Handling Precautions: This device is susceptible to damage as a result of electrostatic discharge (ESD). A static free environment is highly recommended. Follow guidelines according to proper ESD procedures.
Laser Safety: Radiation emitted by laser devices can be dangerous to human eyes.
Avoid eye exposure to direct or indirect radiation.

Licensing

The following U.S. patents are licensed by Finisar to FluxLight, Inc.:
U.S. Patent Nos: 7,184,668, 7,079,775, 6,957,021, 7,058,310, 6,952,531, 7,162,160, 7,050,720