FM-22
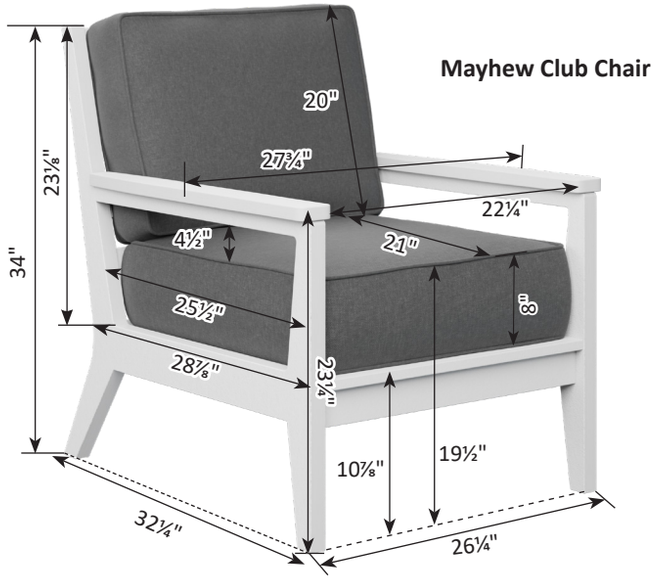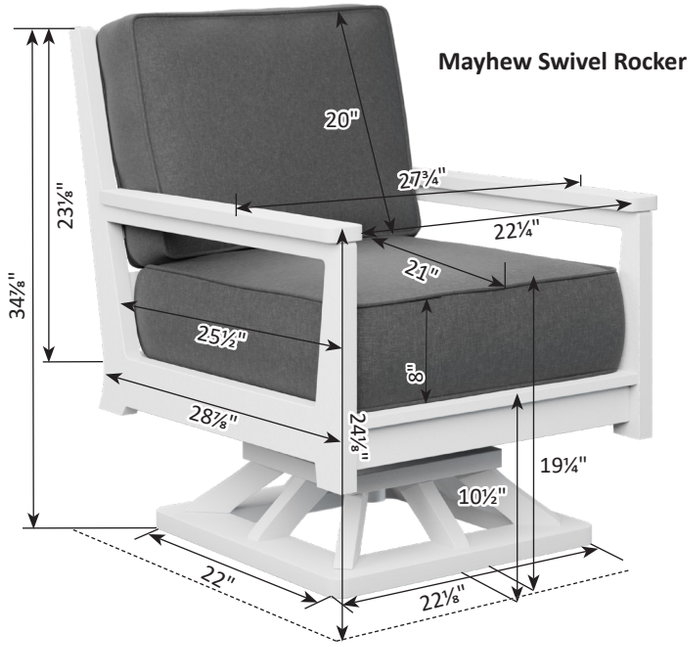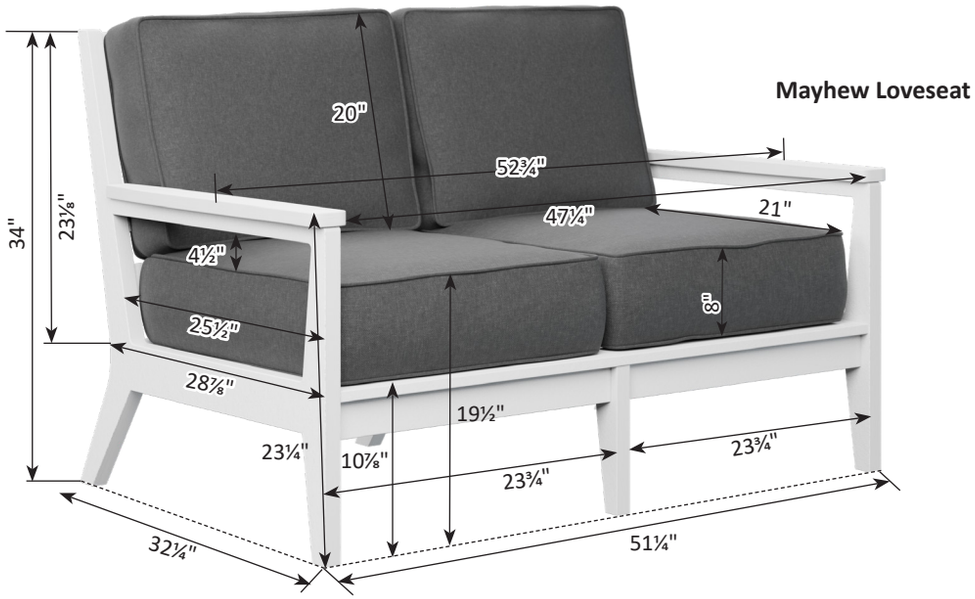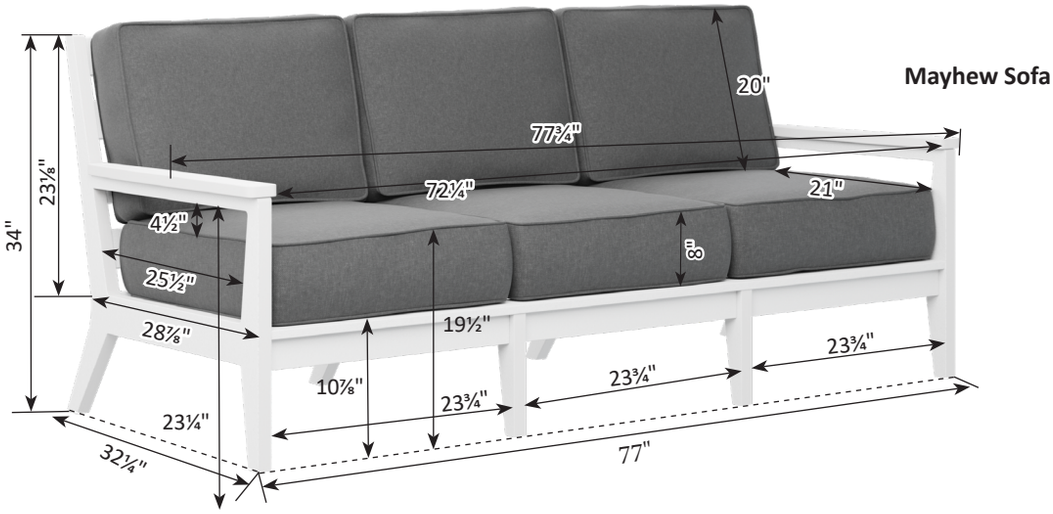
Mayhew Collection Dimensions