USER MANUAL

KUBE II

Lottery

CUSTOM®

CUSTOM S.p.A.
Via Berettine 2/B
43010 Fontevivo (PARMA) - Italy
Tel. : +39 0521-680111
Fax : +39 0521-610701
http: www.custom.biz

Customer Service Department:
Email : support@custom.it

© 2015 CUSTOM S.p.A. – Italy.
All rights reserved. Total or partial reproduction of this manual in whatever form, whether by printed or electronic means, is forbidden. While guaranteeing that the information contained in it has been carefully checked, CUSTOM S.p.A. and other entities utilized in the realization of this manual bear no responsibility for how the manual is used.
Information regarding any errors found in it or suggestions on how it could be improved are appreciated. Since products are subject to continuous check and improvement, CUSTOM S.p.A. reserves the right to make changes in information contained in this manual without prior notification.

The pre-installed multimedia contents are protected from Copyright CUSTOM S.p.A. Other company and product names mentioned herein may be trademarks of their respective companies. Mention of third-party products is for informational purposes only and constitutes neither an endorsement nor a recommendation. CUSTOM S.p.A. assumes no responsibility with regard to the performance or use of these products.

THE IMAGES USED IN THIS MANUAL ARE USED AS AN ILLUSTRATIVE EXAMPLES. THEY COULDN'T REPRODUCE THE DESCRIBED MODEL FAITHFULLY.

**UNLESS OTHERWISE SPECIFIED, THE INFORMATION GIVEN IN THIS MANUAL
ARE REFERRED TO ALL MODELS IN PRODUCTION AT THE ISSUE DATE OF THIS DOCUMENT.**

GENERAL SAFETY INFORMATION
Your attention is drawn to the following actions that could compromise the characteristics of the product:

- Read and retain the instructions which follow.
- Follow all indications and instructions given on the device.
- Make sure that the surface on which the device rests is stable. If it is not, the device could fall, seriously damaging it.
- Make sure that the device rests on a hard (non-padded) surface and that there is sufficient ventilation.
- When positioning the device, make sure cables do not get damaged.
- Use the type of electrical power supply indicated on the device label. If uncertain, contact your dealer.
- Make sure the electrical system that supplies power to the device is equipped with a ground wire and is protected by a differential switch.
- Do not block the ventilation openings.
- Do not insert objects inside the device as this could cause short-circuiting or damage components that could jeopardize printer functioning.
- Do not carry out repairs on the device yourself, except for the normal maintenance operations given in the user manual.
- Make sure that there is an easily-accessible outlet with a capacity of no less than 10A closely to where the device is to be installed.
- Periodically perform scheduled maintenance on the device to avoid dirt build-up that could compromise the correct, safe operation of the unit.
- Before any type of work is done on the machine, disconnect the power supply.
- Do not touch the head heating line with bare hands or metal objects. Do not perform any operation inside the printer immediately after printing because the head and motor tend to become very hot.

GENERAL INSTRUCTIONS
CUSTOM S.p.A. declines all responsibility for accidents or damage to persons or property occurring as a result of tampering, structural or functional modifications, unsuitable or incorrect installations, environments not in keeping with the equipment's protection degree or with the required temperature and humidity conditions, failure to carry out maintenance and periodical inspections and poor repair work.

THE CE MARK AFFIXED TO THE PRODUCT CERTIFY THAT THE PRODUCT SATISFIES THE BASIC SAFETY REQUIREMENTS.

The device is in conformity with the essential Electromagnetic Compatibility and Electric Safety requirements laid down in Directives 2006/95/CE and 2004/108/CE inasmuch as it was designed in conformity with the provisions laid down in the following Standards:

- EN 55022 Class B *(Limits and methods of measurements of radio disturbance characteristics of Information Technology Equipment)*
- EN 55024 *(Information Technology Equipment – Immunity characteristics – Limits and methods of measurement)*
- EN 60950-1 *(Safety of information equipment including electrical business equipment)*

GUIDELINES FOR THE DISPOSAL OF THE PRODUCT

The crossed-out rubbish bin logo means that used electrical and electronic products shall NOT be mixed with unsorted municipal waste. For more detailed information about recycling of this product, refer to the instructions of your country for the disposal of these products.

- Do not dispose of this equipment as miscellaneous solid municipal waste, but arrange to have it collected separately.
- The re-use or correct recycling of the electronic and electrical equipment (EEE) is important in order to protect the environment and the wellbeing of humans.
- In accordance with European Directive WEEE 2002/96/EC, special collection points are available to which to deliver waste electrical and electronic equipment and the equipment can also be handed over to a distributor at the moment of purchasing a new equivalent type.
- The public administration and producers of electrical and electronic equipment are involved in facilitating the processes of the re-use and recovery of waste electrical and electronic equipment through the organisation of collection activities and the use of appropriate planning arrangements.
- Unauthorised disposal of waste electrical and electronic equipment is punishable by law with the appropriate penalties.

The format used for this manual improves use of natural resources reducing the quantity of necessary paper to print this copy.

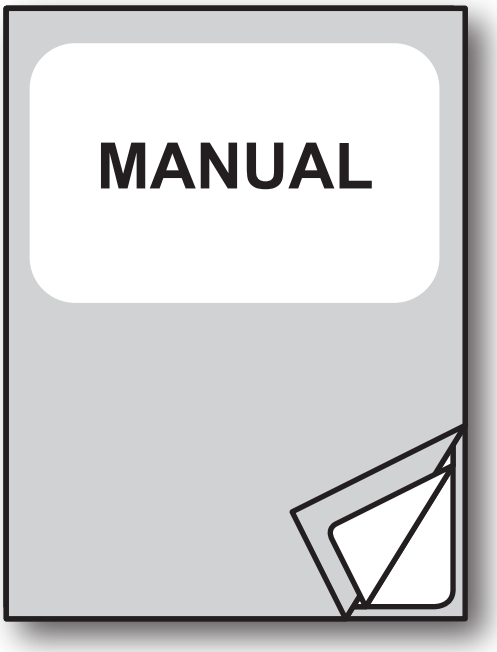

For details on the commands,
refer to the manual with code **77200000001000**

TABLE OF CONTENTS

1 INTRODUCTION . . . 9
1.1 Document structure . . . 9
1.2 Explanatory notes used in this manual . . . 9

2 DESCRIPTION . . . 11
2.1 Box content . . . 11
2.2 Device components . . . 12
2.3 Product label . . . 14
2.4 Key functions: power up . . . 15
2.5 Key functions: standby . . . 16
2.6 Status messages . . . 17

3 INSTALLATION . . . 19
3.1 Connections . . . 19
3.2 Pinout . . . 20
3.3 Driver and SDK . . . 23

4 OPERATION . . . 25
4.1 Opening the device . . . 25
4.2 Switch the device ON/OFF . . . 26
4.3 Loading the paper roll . . . 27

5 CONFIGURATION . . . 29
5.1 Configuration mode . . . 29
5.2 Setup report . . . 30
5.3 Device status . . . 31
5.4 Printer parameters . . . 32
5.5 Hexadecimal dump . . . 35

6 MAINTENANCE . . . 37
6.1 Autocutter jam . . . 37
6.2 Planning of cleaning operations . . . 38
6.3 Cleaning . . . 39
6.4 Upgrade firmware . . . 44

7 SPECIFICATION 47
7.1 Hardware specifications 47
7.2 Character specifications 50
7.3 Device dimensions 51
7.4 Power supply dimensions cod. 963GE020000003 52
7.5 Paper specification 53
7.6 Character sets 55

8 CONSUMABLES 57

9 ACCESSORIES 59
9.1 Sides replacement 60

10 ALIGNMENT 61
10.1 Enable alignment 62
10.2 Calibration 64
10.3 Alignment parameters 66
10.4 Printing area 69

11 TECHNICAL SERVICE 71

1 INTRODUCTION

1.1 Document structure

This document includes the following chapters:

1	INTRODUCTION	information about this document
2	DESCRIPTION	general description of device
3	INSTALLATION	information required for a correct installation of the device
4	OPERATION	information required to make the device operative
5	CONFIGURATION	description of the configuration parameters of the device
6	MAINTENANCE	information for a correct periodic maintenance
7	SPECIFICATION	technical specification for the device and its accessories
8	CONSUMABLES	description and installation of the available consumables for the device
9	ACCESSORIES	description and installation of the available accessories for the device
10	ALIGNMENT	information required for managing the paper alignment
11	TECHNICAL SERVICE	information required for contacting the technical service

1.2 Explanatory notes used in this manual

NOTE:	Gives important information or suggestions relative to the use of the device
ATTENTION:	Gives information that must be carefully followed to guard against damaging the device
DANGER:	Gives information that must be carefully followed to guard against operator injury or damage

2 DESCRIPTION

2.1 Box content

Remove the device from its carton being careful not to damage the packing material so that it may be re-used if the device is to be transported in the future.
Make sure that all the components illustrated below are present and that there are no signs of damage. If there are, contact Customer Service.

1. Paper roll
2. AC adapter
3. Paper adaptation stirrup
4. USB cable
5. AC Power cable
6. Documentation (Short guide, sheet warranty)
7. Device

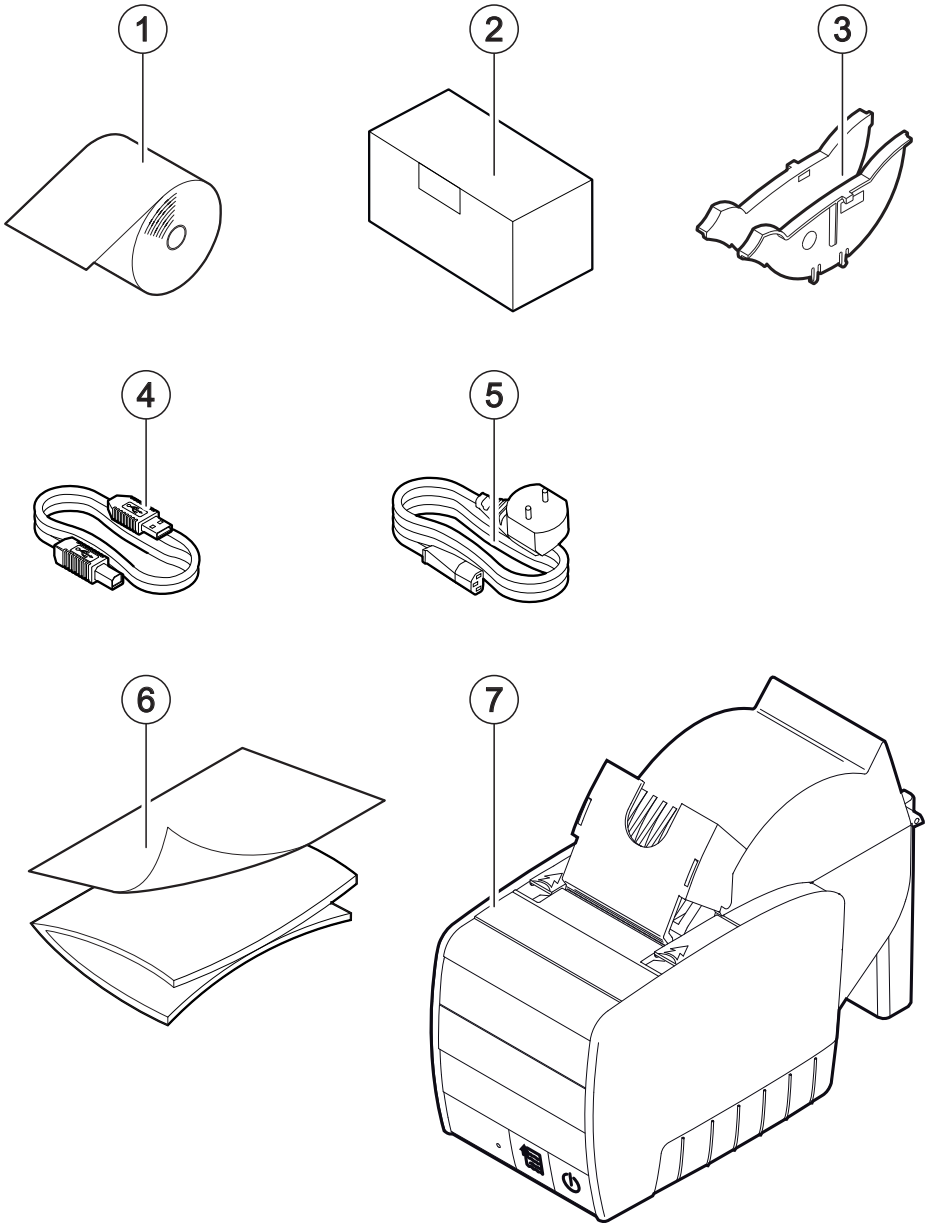

- Open the device packaging.
- Remove the packing frame content and remove the packing frame.
- Take out the device.
- Keep the box, trays and packing materials in the event the device must be transported/shipped in the future.

2.2 Device components

External view

1. Paper compartment
2. Paper out
3. Stacker
4. Opening lever
5. Status LED
6. FEED key
7. ON/OFF key
8. RS232 serial port
9. USB port
10. Drawer port
11. Power supply port

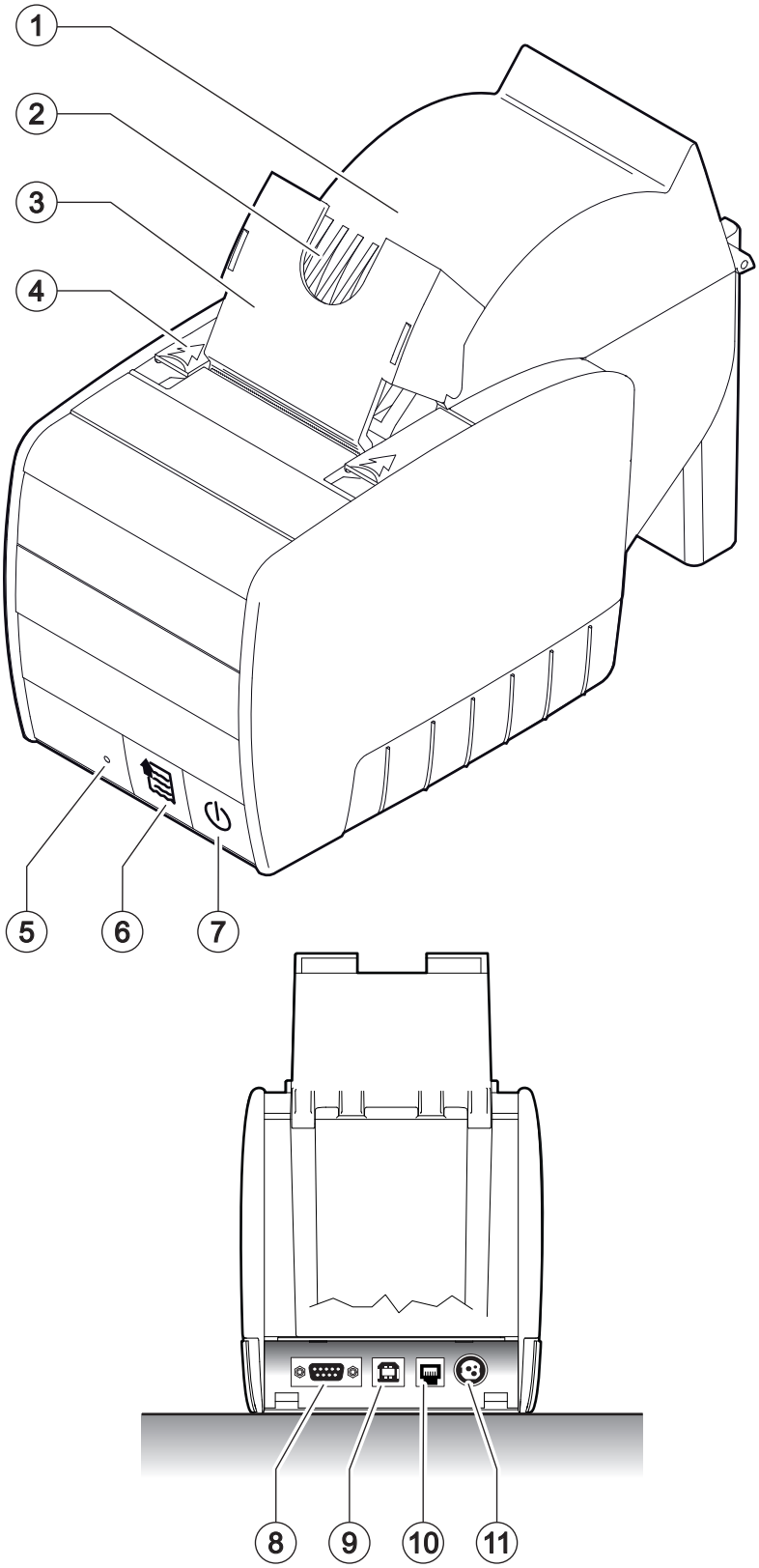

Internal view

1. Sensor for cover open
2. Sensor for paper in presence / Sensor for black mark
3. Temperature sensor for the printhead
4. Sensor for detecting near paper end

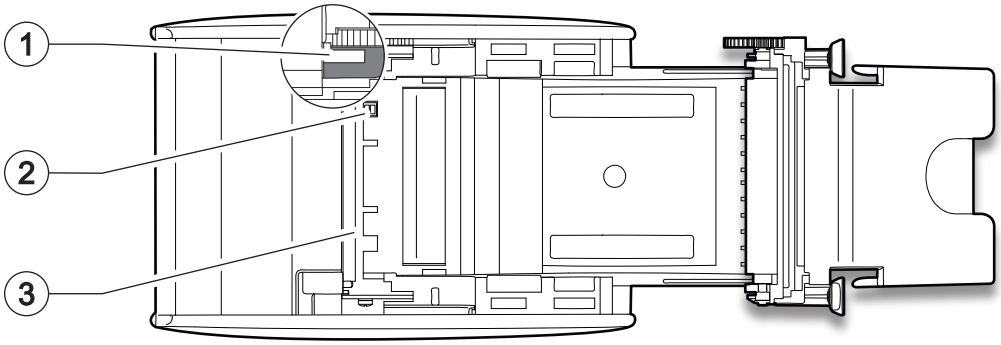

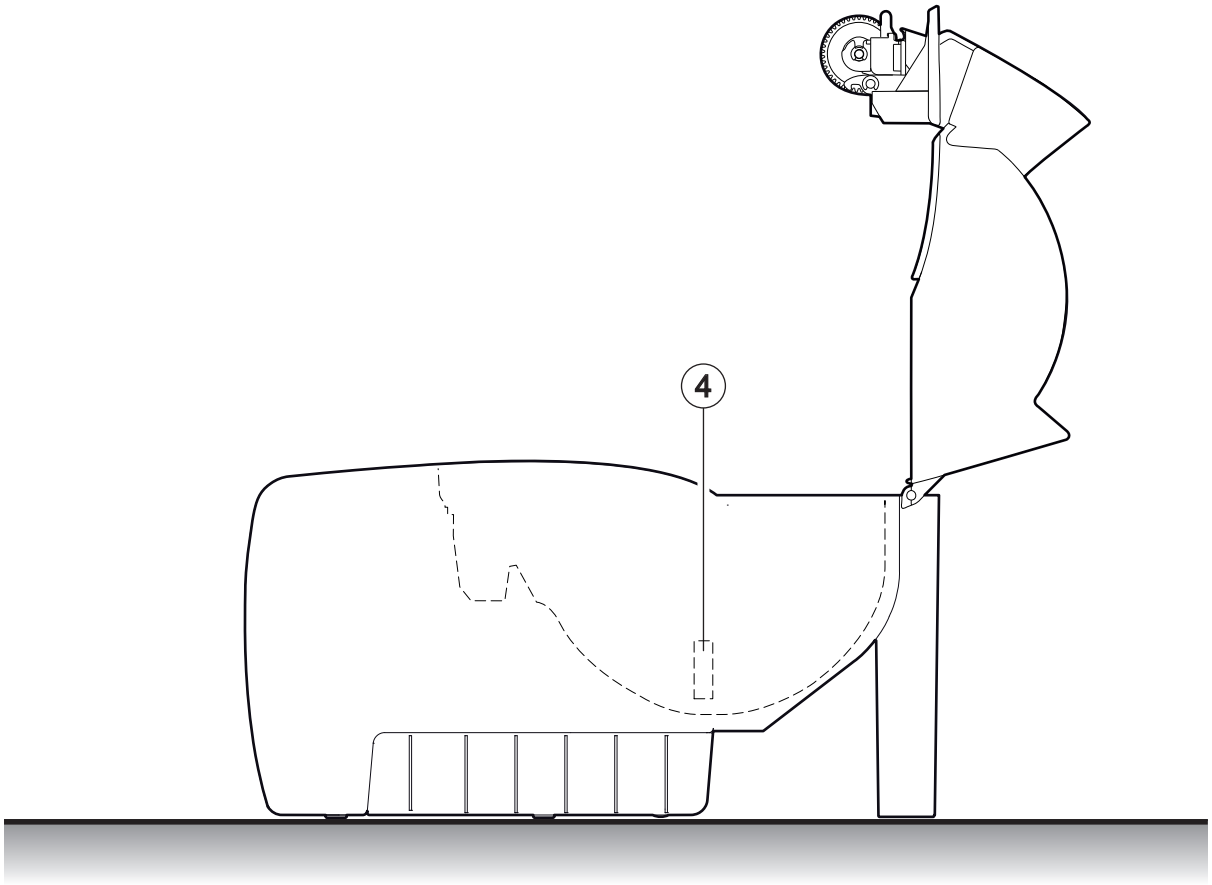

2.3 Product label

PC = Product code (14 digits)
SN = Serial number
HW = Hardware release

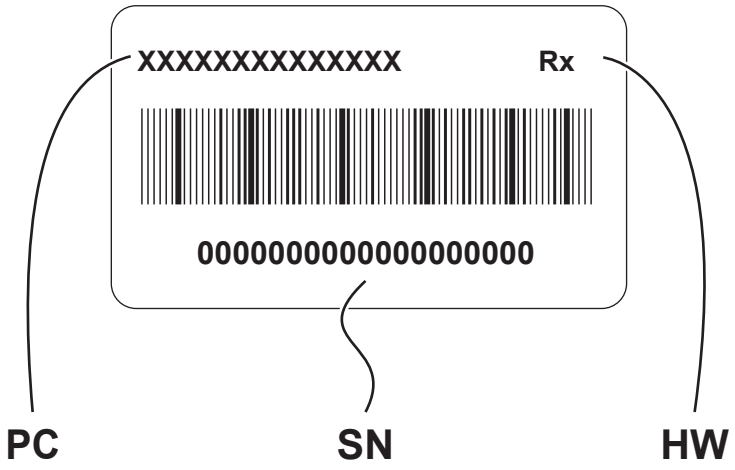

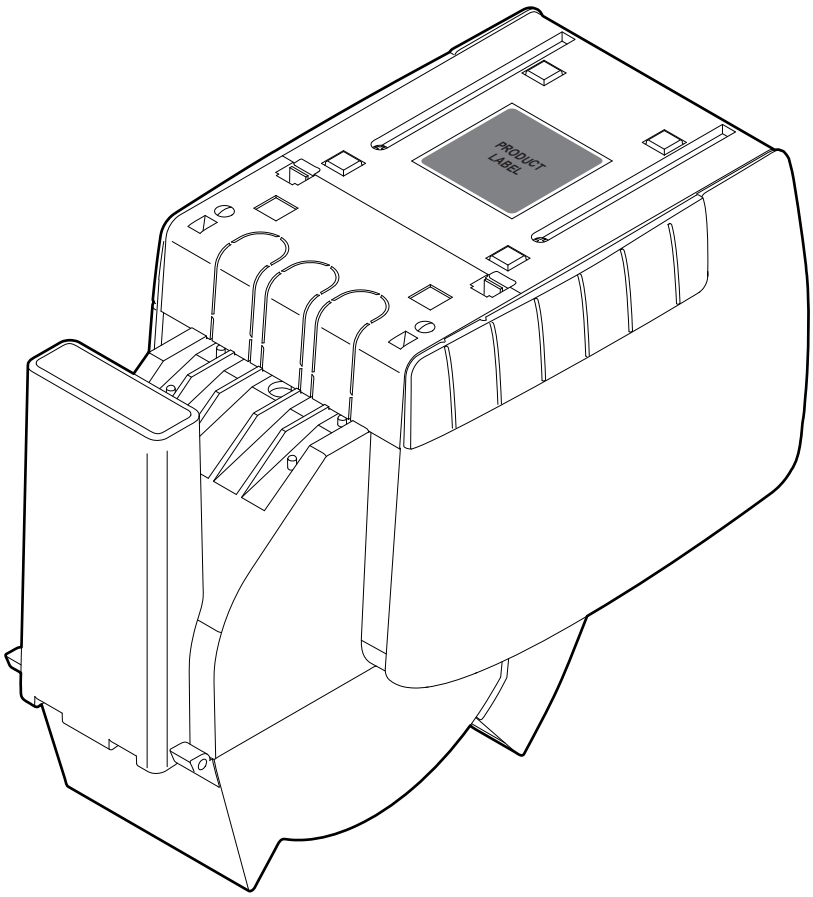

2.4 Key functions: power up

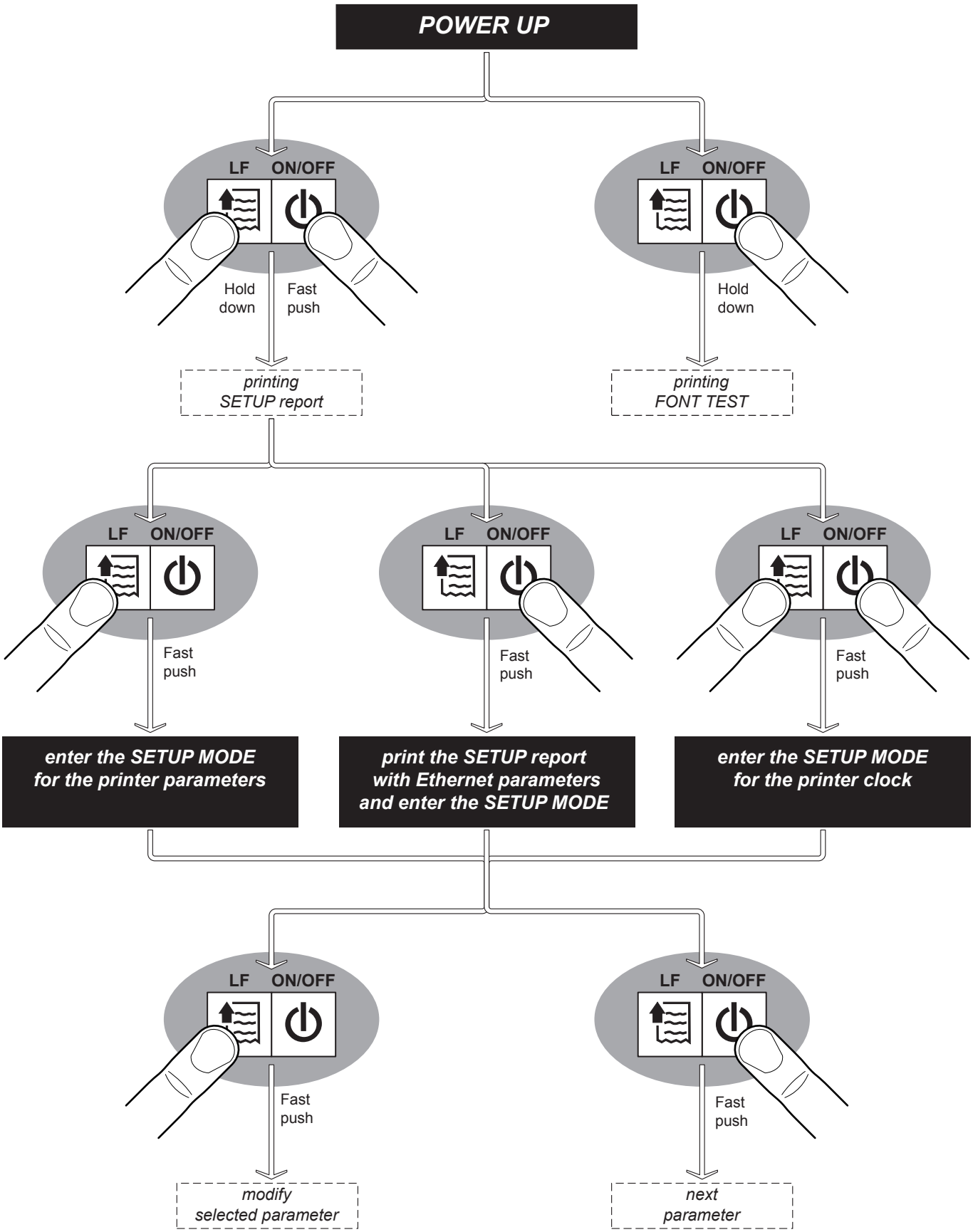

2.5 Key functions: standby

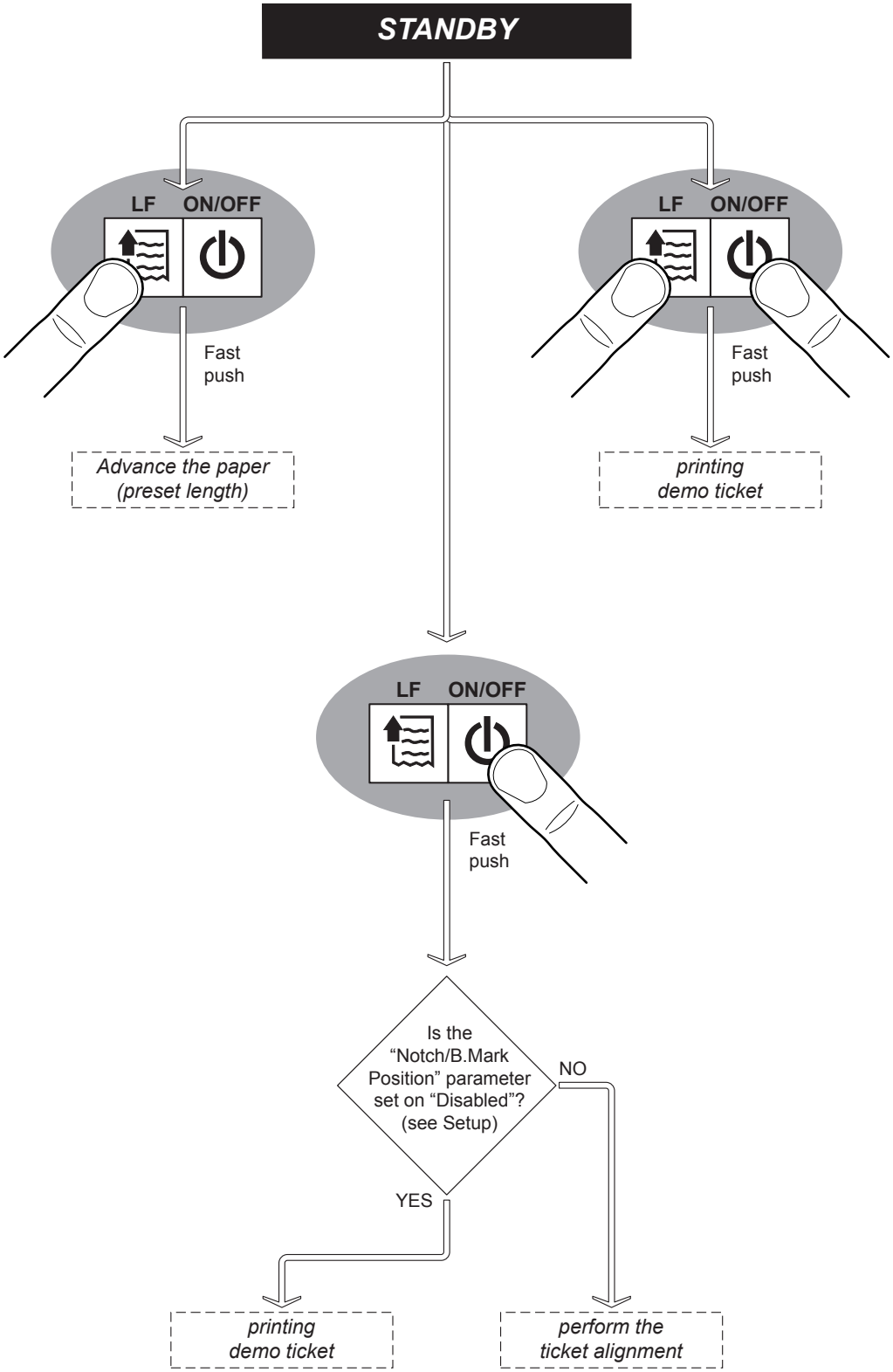

2.6 Status messages

The Status LED indicates hardware status of device. Given in the table below are the various LED signals and the corresponding device status.

STATUS LED		DESCRIPTION
-	***OFF***	PRINTER OFF
GREEN	***ON***	PRINTER ON: NO ERROR
GREEN COMMUNICATION STATUS	***x 1***	RECEIVE DATA
	x 2	RECEPTION ERRORS (PARITY, FRAME ERROR, OVERRUN ERROR)
	x 3	COMMAND NOT RECOGNIZED
	x 4	COMMAND RECEPTION TIME OUT
	x 5	NEAR PAPER END
YELLOW RECOVERABLE ERROR	***x 2***	HEADING OVER TEMPERATURE
	x 3	PAPER END
	x 5	POWER SUPPLY VOLTAGE INCORRECT
	x 6	COVER OPEN
RED UNRECOVERABLE ERROR	***x 3***	RAM ERROR
	x 4	EEPROM ERROR
	x 5	CUTTER ERROR

3 INSTALLATION

3.1 Connections

The following figure shows the possible connections for the device.

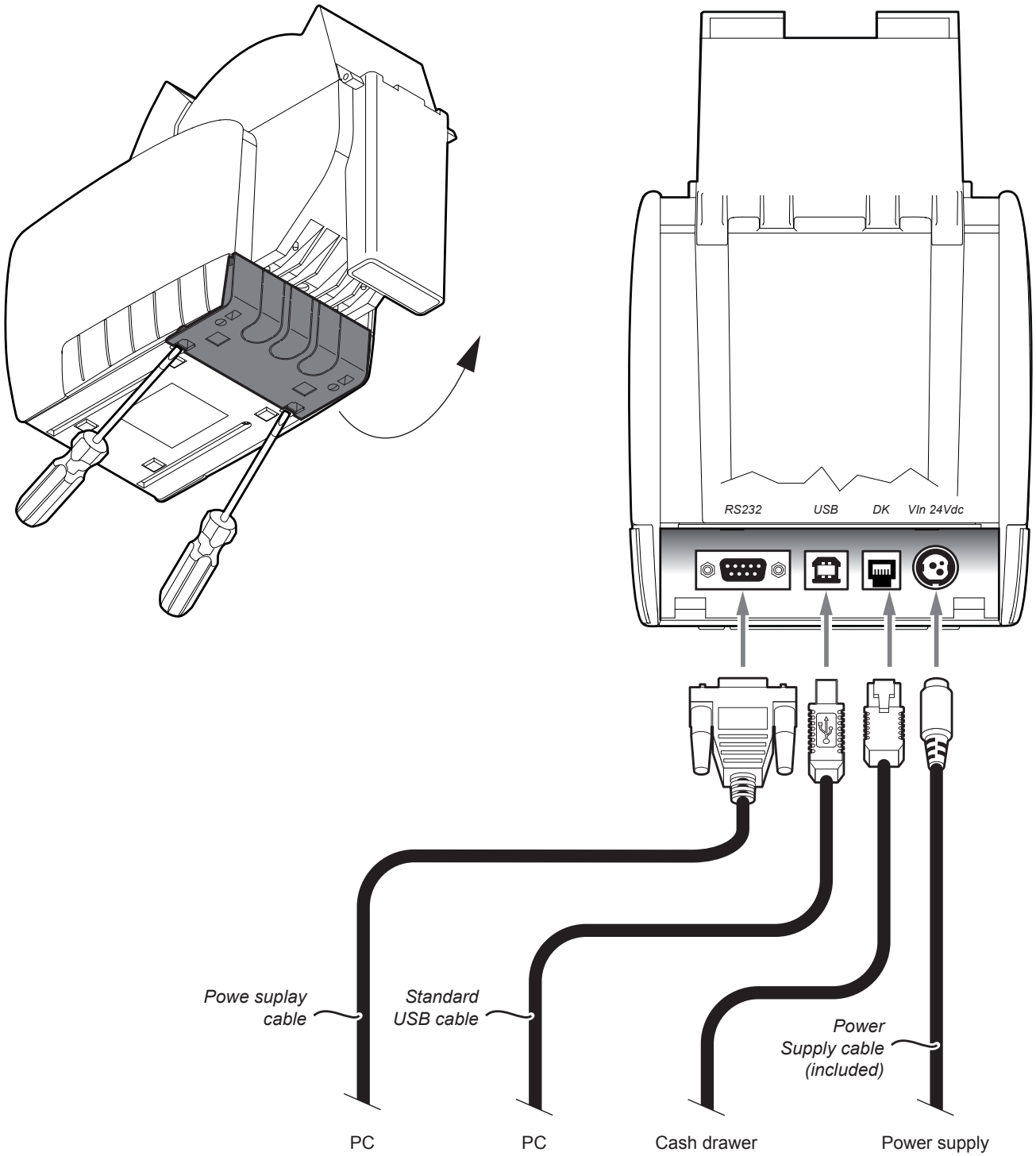

ATTENTION:
In some using conditions, we recommend the installation of a ferrite core on the power supply cable.

NOTE: If RS232 and USB connectors are inserted, communication port is USB.

3.2 Pinout

POWER SUPPLY
Tripolar female connector

J10	1	+24 Vdc
	2	GND
	3	GND
	4	Frame GND

ATTENTION:
Respect power supply polarity.

NOTE:
Power supply cable
The following figure shows the connector pinout of the power supply cable for the device:

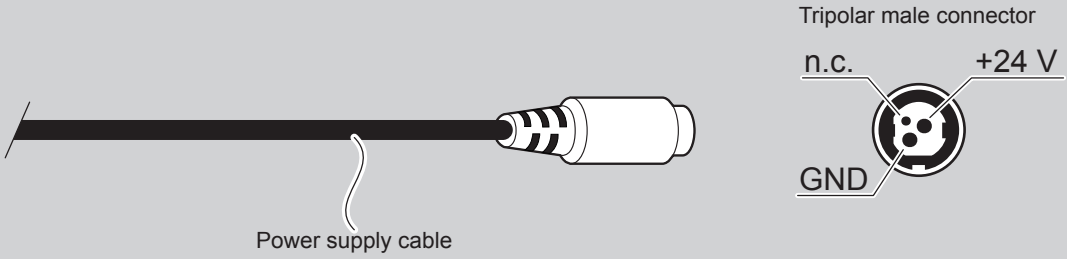

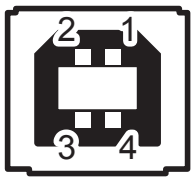

USB INTERFACE
Female USB type B connector

J14	1	USB0-VBUS	(in)
	2	D0 -	(in/out)
	3	D0 +	(in/out)
	4	GND	
	SH1	SHIELD	
	SH2	SHIELD	

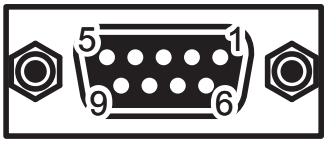

SERIAL INTERFACE

Female DB9 connector

J13	1	DTR	(out)	When “1”, printer is fed
	2	TX	(out)	During transmission, oscillates between “0” and “1” depending on data
	3	RX	(in)	During reception, oscillates between “0” and “1” depending on data
	4	n.c.		
	5	GND		
	6	DTR	(out)	When “1”, printer is fed
	7	n.c.		
	8	RTS-O	(out)	When “1”, printer is ready to receive data
	9	n.c.		

NOTES

Given the presence of the RS232 standard, logic value “0” corresponds to a voltage level of between +3 Vdc and +15 Vdc and logic value “1” corresponds to a voltage level of between -3 Vdc and -15 Vdc.

DEVICE > PC connection

Use an RS232 serial cable to connect the printer to a personal computer. The following picture shows an example of connection between the device and a personal computer using a 9 pin serial connector.

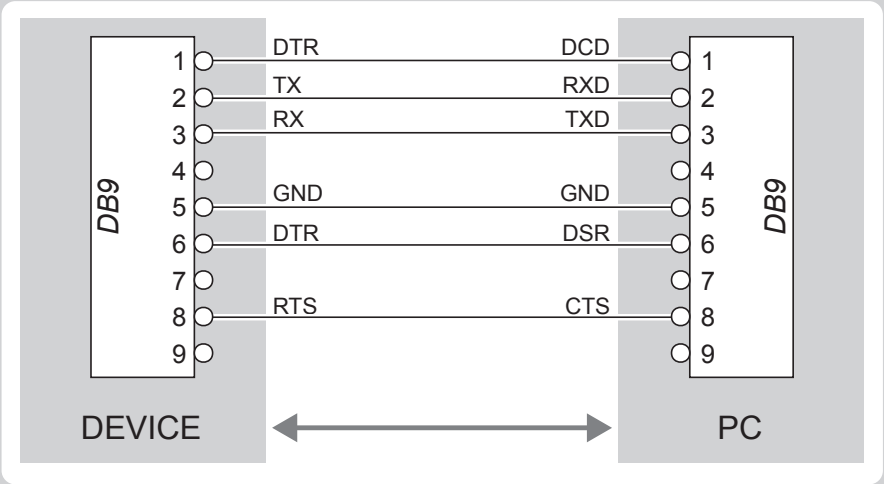

When use a serial cable, we recommend the installation of a ferrite core on the serial cable..

DRAWER CONNECTOR

Female RJ12 connector

J7	1	GND		
	2	SOL1	(out)	Drawer 1 command (open collector)
	3	CASS	(in)	Drawer status
	4	+24 Vdc		
	5	n.c.		
	6	GND		

NOTES:
The solenoid of the drawer 1 must be connected from Pin 2 to Pin 4 on the drawer connector

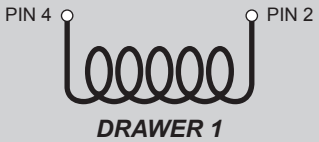

DEVICE > CASH DRAWER (optional) connection
Use an optional adapter cable RJ12-Jack to connect the device to a cash drawer. Refer to the picture below for the connector pin signals

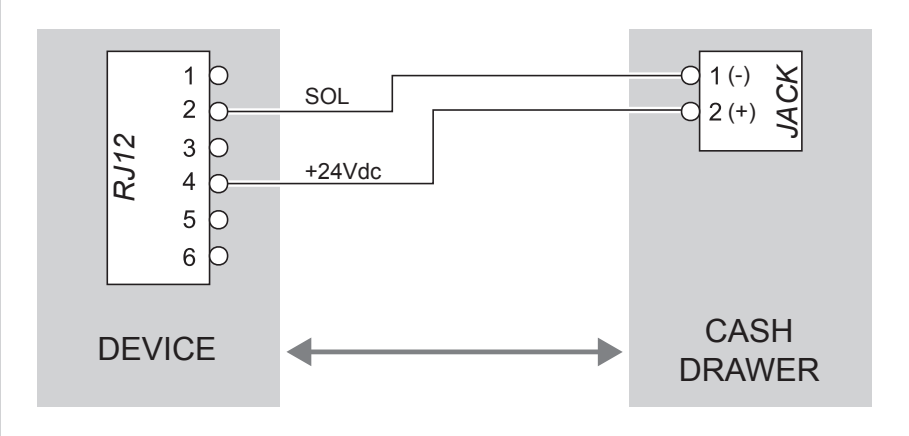

3.3 Driver and SDK

The drivers are available for the following operating system:

OPERATING SYSTEM	DESCRIPTION	INSTALLATION PROCEDURE
Windows	Driver for Windows XP	From the START menu, press Run and type-in the path where the SW was saved on your PC, then click OK. Follow the instructions that appear on the screen to install the driver.
	Driver for Windows VISTA (32/64bit)	
	Driver for Windows 7 (32/64bit)	
	Driver for Windows 8 (32/64bit)	
	Driver for Windows 8.1 (32/64bit)	
	Driver for Opos	
Linux	32/64 bit	Follow the instruction get back on the README.TXT file. You can find it in the software package downloaded in advance.
Windows / Linux	Driver for JavaPOS	Extract the zipped folder to the destination path desired.
Android	Library for CustomAndroidAPI	Extract the zipped folder to the destination path desired. Follow the instructions present in the software package that you downloaded on how to install and use the library.
iOS	Library for CustomiOSApi	Extract the zipped folder to the destination path desired. Follow the instructions present in the software package that you downloaded on how to install and use the library.

NOTA:
All drivers can be found in the DOWNLOAD section of the web site www.custom.biz.

4 OPERATION

4.1 Opening the device

1

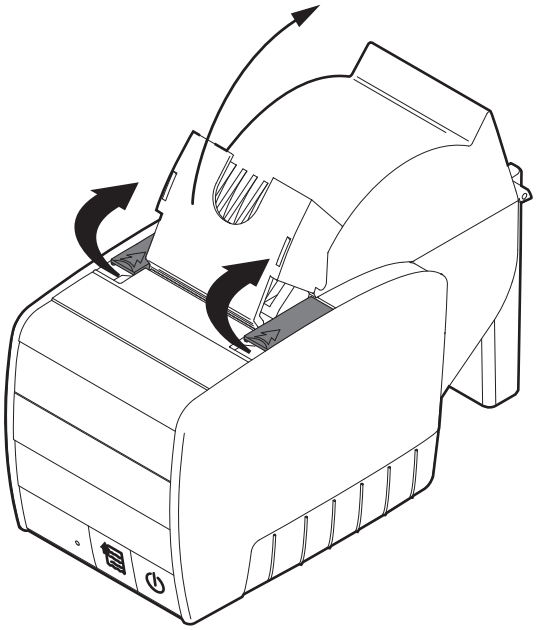

Lift the opening levers and
open the device cover.

2

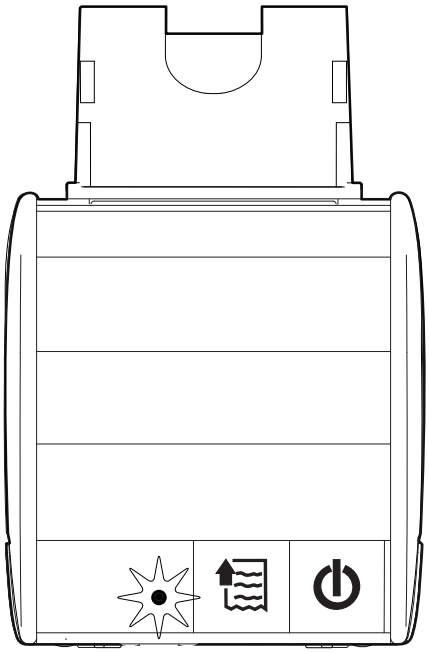

The indicator shows the state “Cover Open”

4.2 Switch the device ON/OFF

1

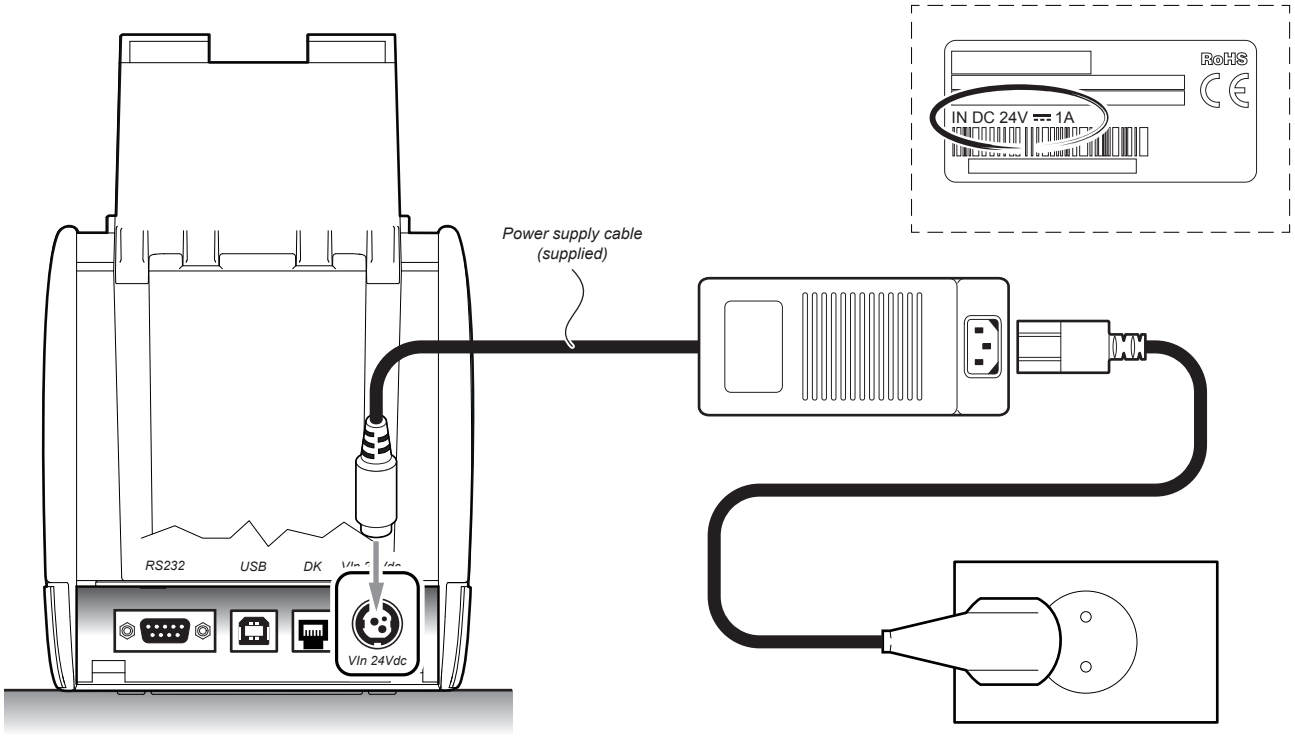

Connect the power adapter (supplied) to the device and the mains outlet.
Use the type of electrical power supply indicated on the label.

2

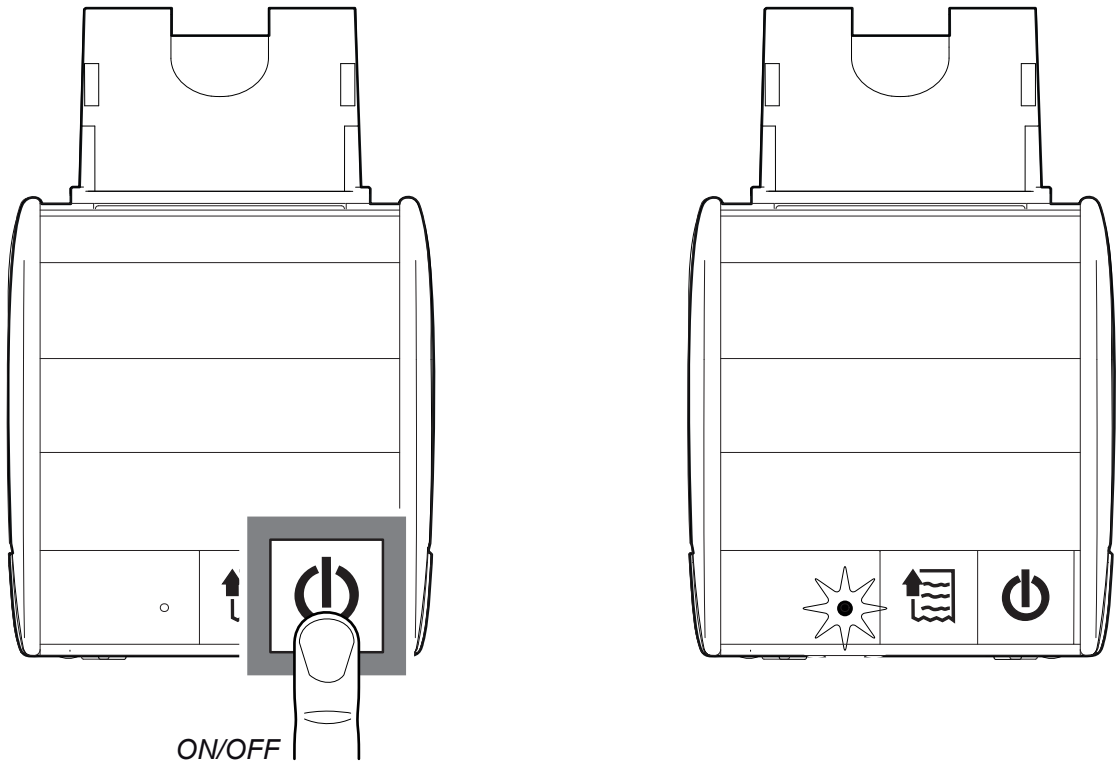

Switch device On pressing key ON/OFF, the indicator light is switched on and the device is ready.
Switch device Off pressing key ON/OFF for at least 3 seconds.

4.3 Loading the paper roll

To change the paper proceed as follows. At every change of paper, check inside the device to locate and remove any scraps of paper.

1

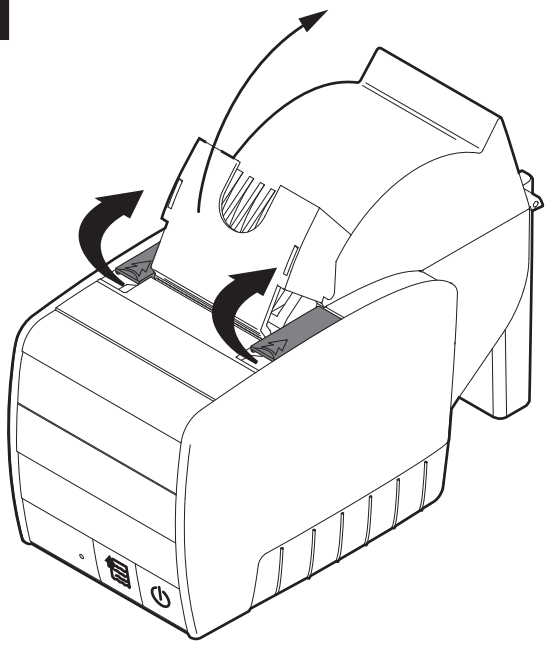

Open the device cover.

2

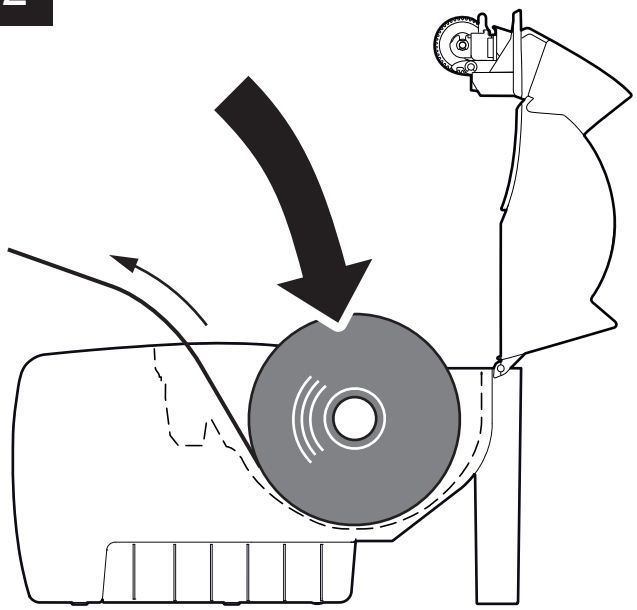

Place the roll in the paper compartment and pull out the paper for a few centimetres.

3

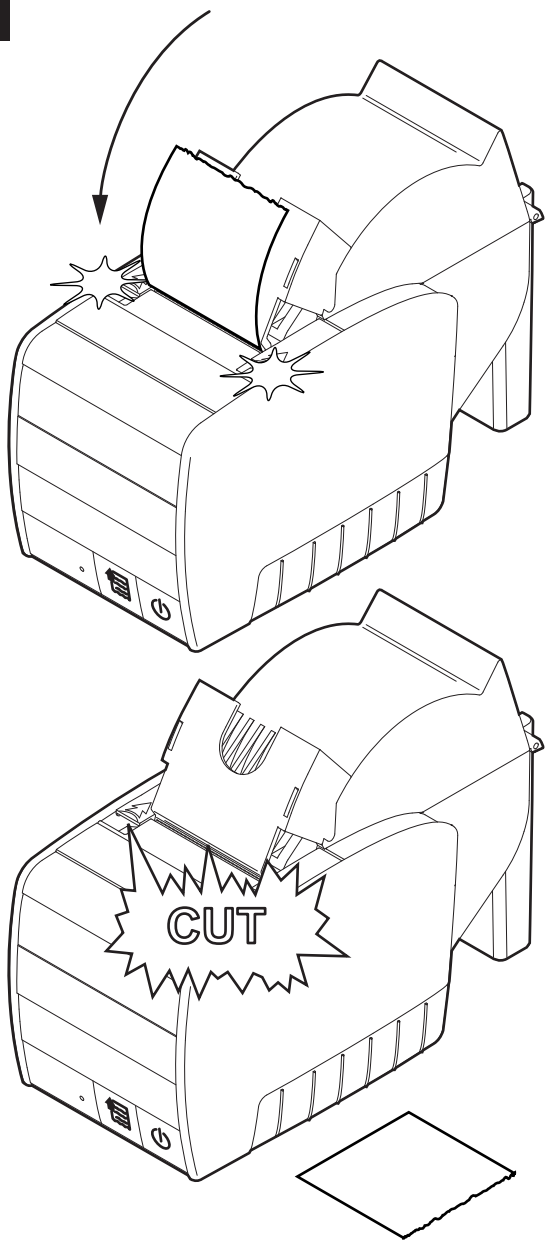

Close the device cover and wait until the paper is loaded and automatically cut off.

5 CONFIGURATION

5.1 Configuration mode

To enter the configuration mode and print a SETUP report with the operating parameters of the device, proceed as follows.

1

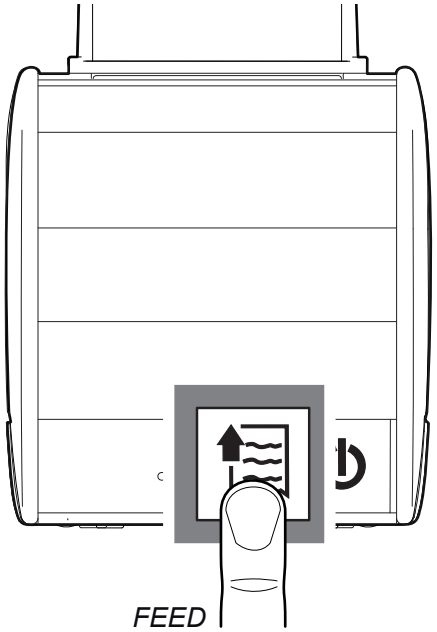

Press the FEED key.

2

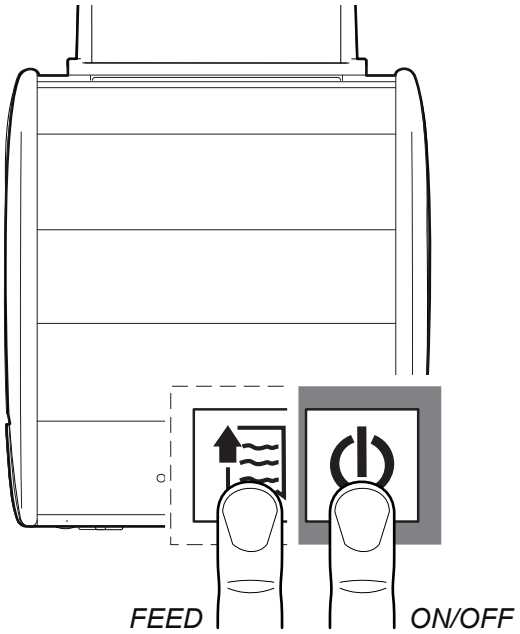

While pressing the FEED key, switch on the device by pressing the ON/OFF key.

3

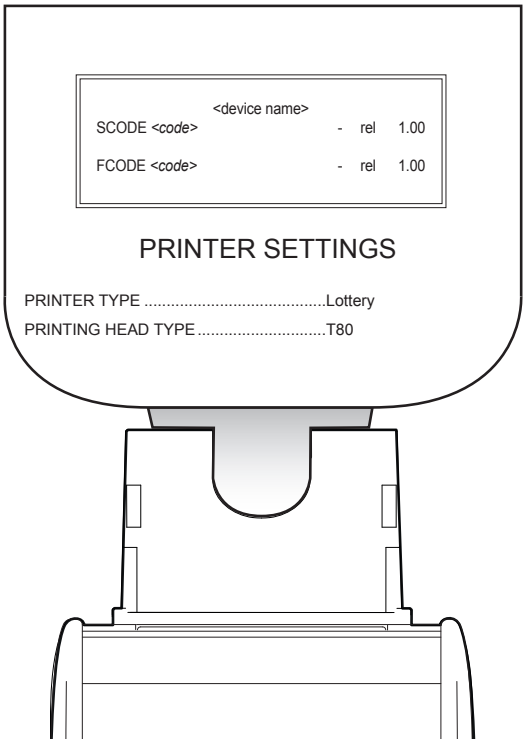

The device prints the report with parameters for printer settings.

4

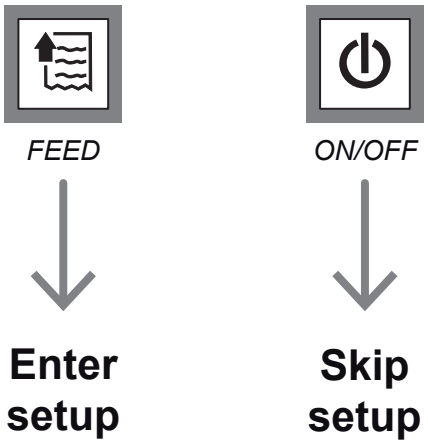

Press the FEED key to enter the configuration mode or press the ON/OFF key to skip setup procedure.

5.2 Setup report

The following figures show the setup reports of the device. The shown values for parameters are sample values; for the list and the description of device parameters see the following paragraphs.

DEVICE NAME and FIRMWARE MODULES RELEASE

<device name>

SCODE <*code*> - rel 1.00

FCODE <code> - rel 1.00

PRINTER SETUP

DEVICE STATUS

PRINTER TYPE .....Lottery
PRINTING HEAD TYPE T80
INTERFACE USB/RS232
PROGRAM MEMORY TEST.....OK
DYNAMIC RAM TEST.....OK
EEPROM TEST.....OK
CUTTER TEST.....OK
HEAD VOLTAGE [V] = 24.34
HEAD TEMPERATURE [°C] = 28
POWER ON COUNTER = 4
PAPER PRINTED [cm] = 40
CUT COUNTER = 1

PRINTER PARAMETERS

RS232 Baud Rate ..... : **115200 bps**
RS232 Data Length ..... : **8 bits/chr**
RS232 Parity ..... : **None**
RS232 Handshaking ..... : **Hardware**
Busy Condition ..... : **RxFull**
USB Address Number ..... : **0**
Autofeed ..... : **CR Disabled**
Print Mode ..... : **Normal**
Chars / inch ..... : **A=15 B=20 cpi**
Speed / Quality..... : **Normal**
Printing Width ..... : **80mm[82.5 PaperW]**
Notch Alignment ..... : **Enable**
Notch Threshold .....: **2.00V**
Total cut (ESC i) ..... : **Enabled**
PaperEnd Buffer Clear ..... : **Disabled**
PowerFail WakeUp Mode..... : **LAST PWR State**
Font Type..... : **International**
Code Table [num] ..... : **00**
Print Density..... : **0%**

KEYS FUNCTIONS

[LF] Key to *enter setup*
[ON/OFF] Key to *skip Setup*

5.3 Device status

The device operating status is indicated in the configuration print-out in which, next to the name of the components displayed, the following information is given:

PRINTER TYPE	*device model*
PRINTING HEAD TYPE	*print head model*
INTERFACE	*Present interface*
PROGRAM MEMORY TEST	*OK appears if functioning and NOT OK if faulty*
DYNAMIC RAM TEST	*OK appears if functioning and NOT OK if faulty*
EEPROM TEST	*OK appears if functioning and NOT OK if faulty*
CUTTER TEST	*OK appears if functioning and NOT OK if faulty*
HEAD VOLTAGE	*voltage of the head*
HEAD TEMPERATURE	*temperature of the head*
POWER ON COUNTER	*number of power-ups made*
PAPER PRINTED	*centimetres of paper printed*
CUT COUNTER	*number of cuts performed*

5.4 Printer parameters

This device allows the configuration of the parameters listed in the following table.
The parameters marked with the symbol [D] are the default values.
Settings remain active even after the device has been turned off and they are stored in non-volatile memory.

RS232 BAUD RATE	*Communication speed of the serial interface:* *1200 19200* *2400 38400* *4800 57600* *9600 115200 [D]* NOTE: Parameter valid only with serial interface.
RS232 DATA LENGTH	*Number of bit used for characters encoding:* *7 bits/car* *8 bits/car [D]* NOTE: Parameter valid only with serial interface.
RS232 PARITY	*Bit for the parity control of the serial interface:* *None [D] = parity bit omitted* *Even = even value for parity bit* *Odd = odd value for parity bit* NOTE: Parameter valid only with serial interface.
RS232 HANDSHAKING	*Handshaking:* *XON/XOFF = software handshaking* *Hardware [D] = hardware handshaking (CTS/RTS)* NOTES: Parameter valid only with serial interface. When the receive buffer is full, if handshaking is set to XON/XOFF, the device sends the XOFF (0x13) on the serial port. When the receive buffer has cleared once again, if handshaking is set to XON/XOFF, the device sends the XON (0x11) on the serial port.
BUSY CONDITION	*Activation mode for Busy signal:* *OffLine/ RXFull = Busy signal is activated when the device is both in OffLine status and the buffer is full* *RXFull [D] = Busy signal is activated when the buffer is full* NOTE: Parameter valid only with serial interface.

USB ADDRESS NUMBER	*Numerical address code for the univocal identification of the USB device (in case of more than a USB device connected with the same PC):* *0 D 2 4 6 8* *1 3 5 7 9*
AUTOFEED	*Setting of the Carriage Return character:* *CR disabled D = Carriage Return disabled* *CR enabled = Carriage Return enabled*
PRINT MODE	*Printing mode:* *Normal D = enables printing in normal writing way* *Reverse = enables printing rotated 180 degrees*
CHARS / INCH	*Font selection:* *A = 11 cpi, B = 15 cpi* *A = 15 cpi, B = 20 cpi D* NOTE: CPI = Characters Per Inch
SPEED / QUALITY	*Setting of printing speed and printing quality:* *Normal D* *High Quality* *High Speed*
PRINTING WIDTH	*Width of printing area:* *76mm (80 PaperW)* *80mm D (82.5 PaperW)*
NOTCH ALIGNMENT	*Alignment management:* *Disabled D = the black mark alignment is not performed* *Enabled = the black mark alignment is performed*
NOTCH THRESHOLD	*Threshold value for the recognition of the presence of black mark by the black mark sensor:* *0.75 V 1.50 V 2.25 V* *1.00 V 1.75 V 2.50 V* *1.25 V 2.00 V D 2.75 V* NOTE: If the “Notch Alignment” parameter is disabled, this parameter is not printed
TOTAL CUT	*Sets the behavior of the cutter when the total cut command 0x1B 0x69 (ESC i) is sent:* *Disabled = The total cut command 0x1B 0x69 (ESC i) will be ignored* *Enabled D = The total cut command 0x1B 0x69 (ESC i) will be executed.*

PAPEREND BUFFER CLEAR	*Cleaning mode of the data in receive buffer, if the printing is stopped due to lack of paper:* *Disabled [D] = The data remain in the receive buffer. When the paper runs out, the device keeps the remaining data in the receive buffer and prints the remaining portion of the ticket after that the new paper is loaded.* *Enabled = When the paper runs out, all data in the receive buffer are deleted.*
POWERFAIL WAKEUP MODE	*This parameter set the printer state (ON or OFF) that will be automatically restored after a power fail:* *LAST PWR State [D] = the printer returns in the previous state (ON or OFF) before the power fail.* *Always ON = the printer always switches on automatically, after a power fail.* *Always OFF = the printer switches on only by pressing the ON/OFF key after a power fail.*
FONT TYPE	*Setting of the Font Type:* *International [D] = Enables the use of font tables to 256 characters* *Chinese GB18030 = Enables the use of the Chinese extended font GB18030-2000* *Korean PC949 = Enables the use of the Korean extended font PC949* NOTE: When the Chinese and Korean font is enabled, the selection of the character code table is suspended (parameter “CODE TABLE”). When the Chinese and Korean fonts is disabled, it returns the character code table previously in use (parameter “CODE TABLE”).
CODE TABLE [num]	*Identifier number of the character code table to use.* *The numeric value of the identifier is made up with the following two parameters for the setting of two digits for the tens and the units:* **CODE TABLE [num x 10]** — *Setting the digit for tens:* *0 [D] 2 4 6 8* *1 3 5 7 9* **CODE TABLE [num x 1]** — *Setting the digit for units::* *0 [D] 2 4 6 8* *1 3 5 7 9* NOTE: See the paragraph 7.6 to learn about the character tables corresponding to the identification numbers set with this parameter. The character tables set with this parameter are the same set with the command 0x1B 0x74 (refer to the Commands Manual of the device).
PRINT DENSITY	*Adjusting the printing density:* *-50% -12% +25%* *-37% 0 [D] +37%* *-25% +12% +50%*

5.5 Hexadecimal dump

This function is used for the diagnosis of the characters received from the communications port. Characters are printed as hexadecimal code and the corresponding ASCII code (see below). Each line is preceded by a counter in hexadecimal that indicates the number of bytes received.

During the startup, if you hold down the FEED key, the printer enters the self-test routine and print the setup report.
The printer remains in standby until a key is pressed or characters are received through the communication port (Hexadecimal Dump mode). For each character sent, the ticket shows the hexadecimal value and the ASCII codes (if the characters are underlined, the receive buffer is full). Shown below is an example of a Hexadecimal Dump:

HEXADECIMAL DUMP

```
31  32  33  34  35  ...        12345 ...
39  30  31  32  33  ...        90123 ...
37  38  39  75  69  ...        789ui ...
68  6B  6A  73  64  ...        hkjsd ...
73  64  66  6B  6A  ...        sdfkj ...
66  73  64  66  6B  ...        fsdfk ...
65  69  6F  79  75  ...        eioyu ...
6F  72  69  75  77  ...        oriuw ...
6F  75  77  65  72  ...        ouwer ...
77  65  72  69  6F  ...        werio ...
72  69  6F  75  77  ...        riouw ...
6B  6C  73  64  66  ...        klsdf ...
64  66  6B  73  64  ...        dfksd ...
73  64  66  6B  6A  ...        sdfkj ...
66  6B  F2  6A  73  ...        fk≥j ...
6A  6B  6C  68                 jklh
```

6 MAINTENANCE

6.1 Autocutter jam

1

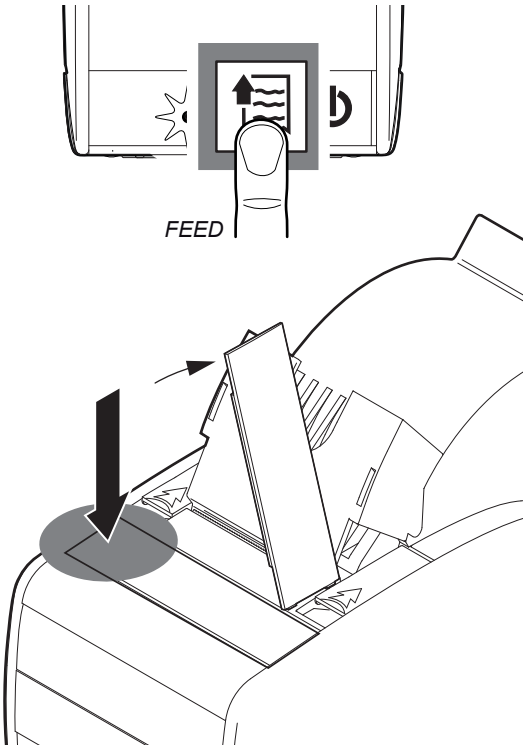

Press the FEED key to try to unlock the cutter.
If the cutter did not unlock press slightly the left side of the cutter cover, so that it opens.

2

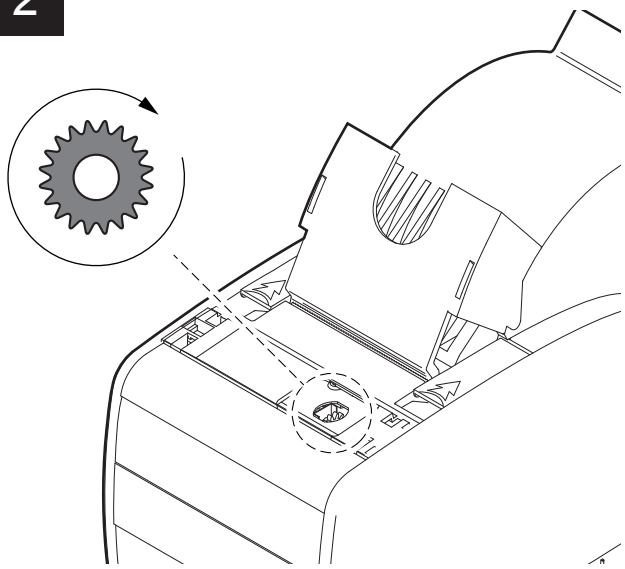

Rotate the mechanism in the direction that oppose less resistance, as shown in the label.

3

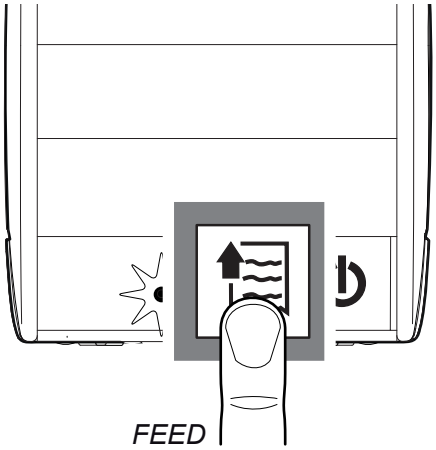

Press the FEED key.

4

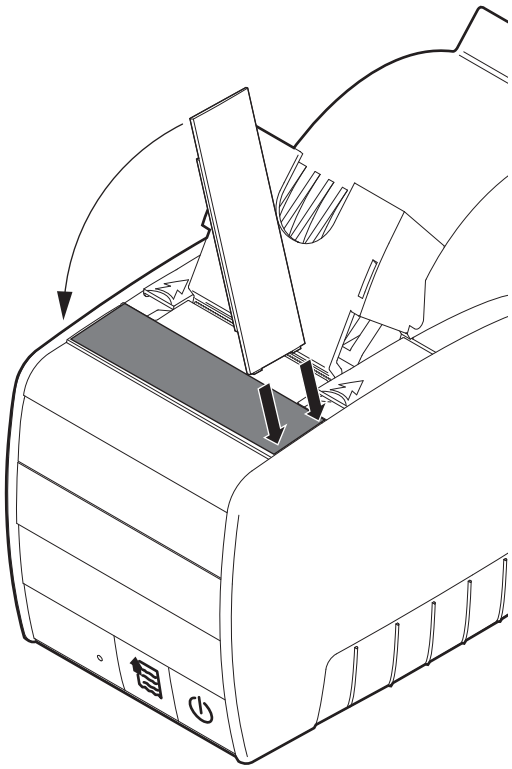

If the problem persists, please contact the customer service.
Reassemble the cover removed previously.

6.2 Planning of cleaning operations

The regular cleaning of the device keeps the print quality and extends its life. The following table shows the recommended planning for the cleaning operations.

EVERY PAPER CHANGE	
Printhead	Use isopropyl alcohol
Rollers	Use isopropyl alcohol
EVERY 5 PAPER CHANGES	
Cutter	Use compressed air
Paper path	Use compressed air or tweezers
Sensors	Use compressed air
EVERY 6 MONTHS OR AS NEEDED	
Printer case	Use compressed air or a soft cloth

For specific procedures, see the following pages.

NOTE: If you use the device in dusty environments, you must reduce the intervals between the cleaning operations.

6.3 Cleaning

For periodic cleaning of the device, see the instructions below

Sensors

1

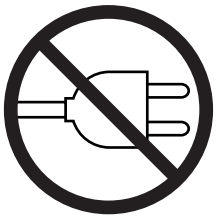

Disconnect the power supply cable and open the device cover (see par. 4.1)

2

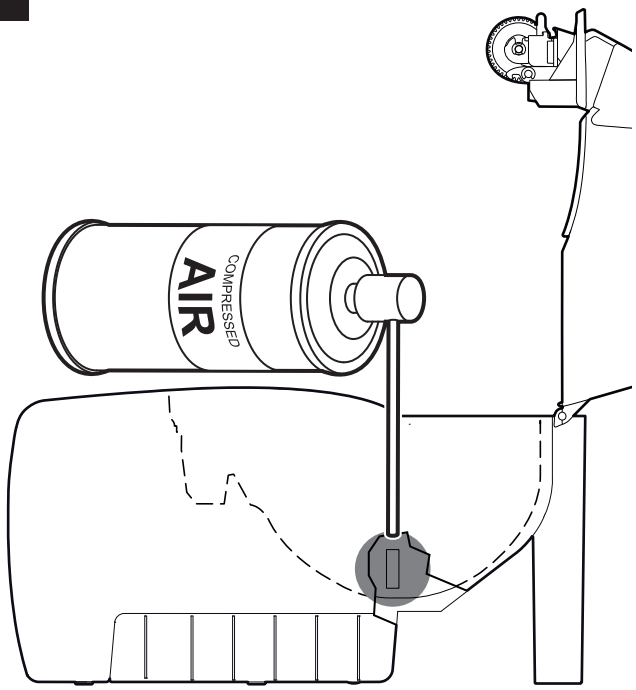

ATTENTION:
Do not use alcohol, solvents, or hard brushes.
Do not let water or other liquids get inside the device.

Clean the device sensors by using compressed air.

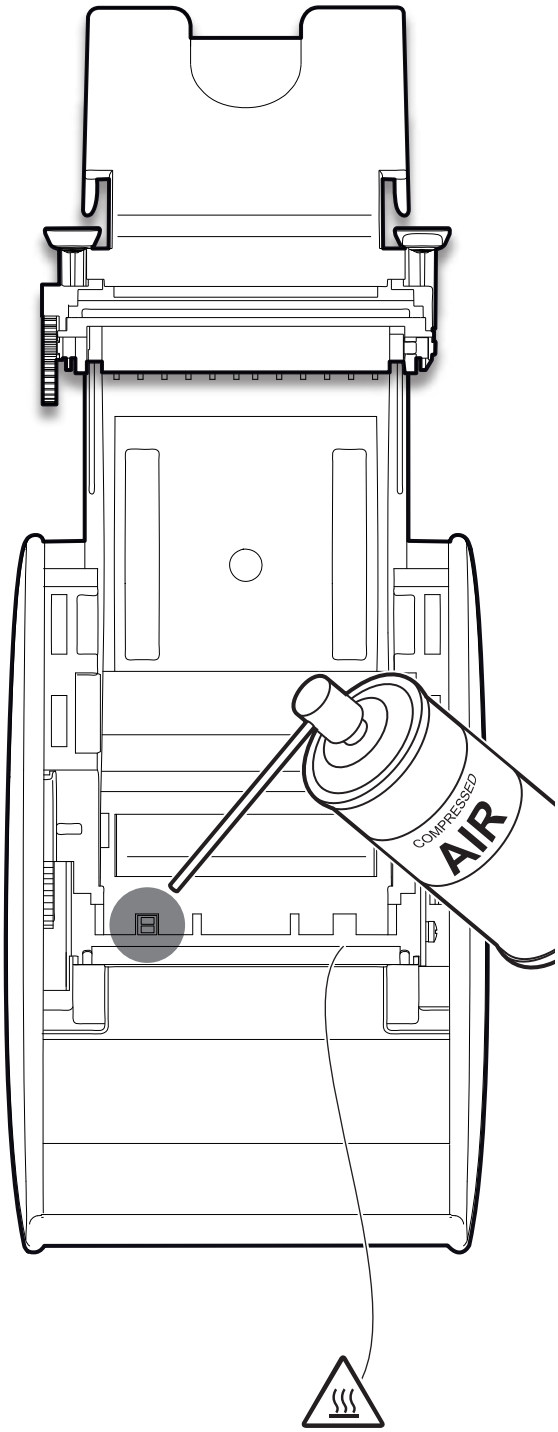

Paper path

1

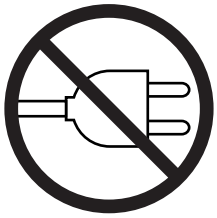

Disconnect the power supply cable and open the device cover (see par. 4.1)

2

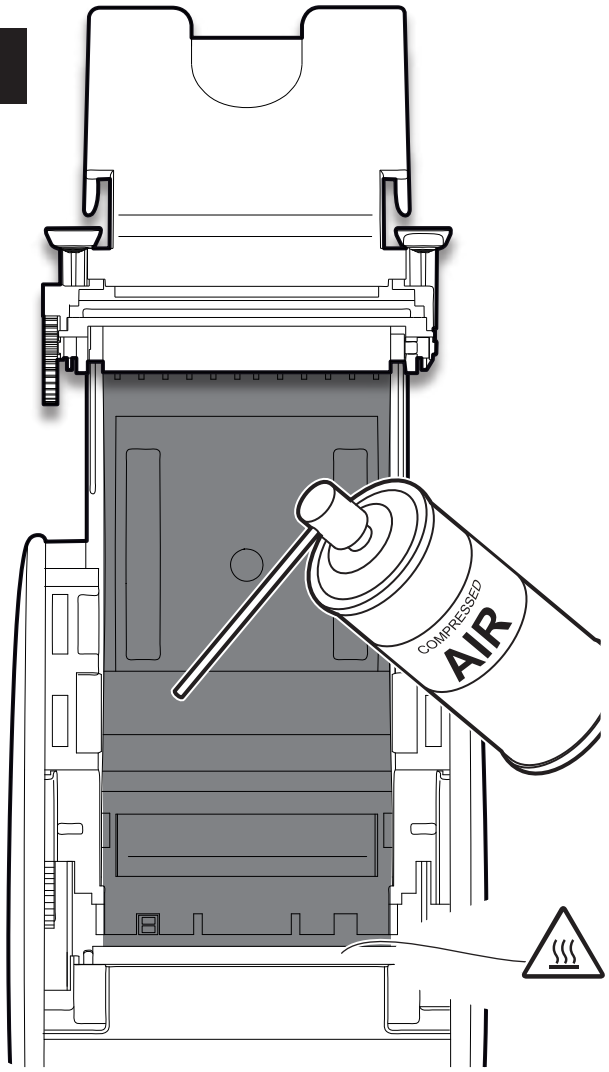

ATTENTION:
Do not use alcohol, solvents, or hard brushes.
Do not let water or other liquids get inside the device.

Clean the area involved in the passage of paper by using compressed air.

Printhead

1

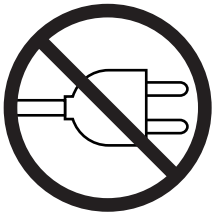

Disconnect the power supply cable and open the device cover (see par. 4.1)

2

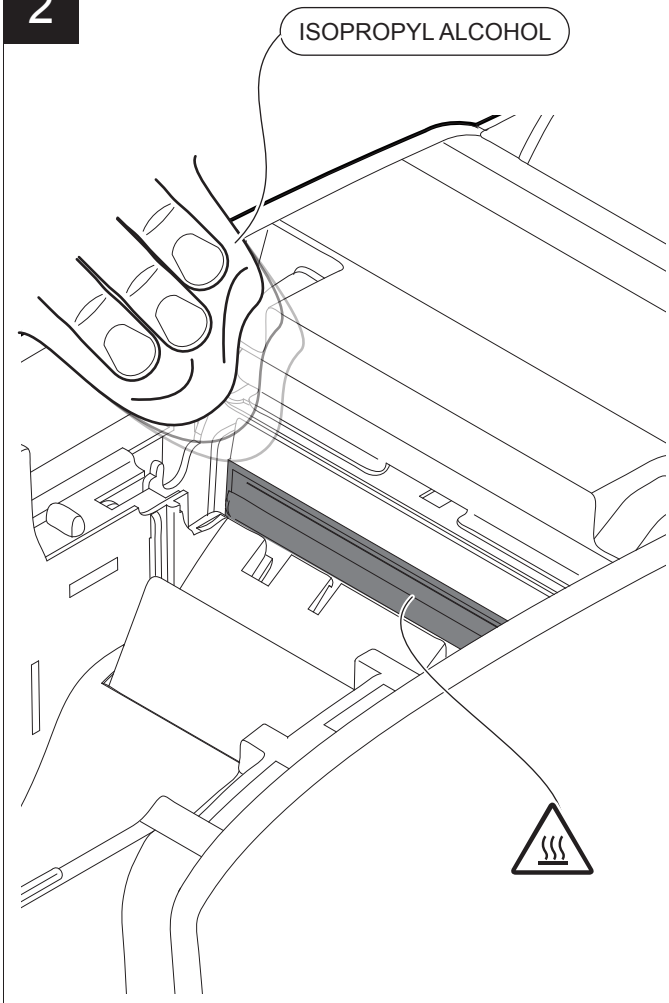

ATTENTION:
Do not use solvents, or hard brushes.
Do not let water or other liquids get inside the machine.

Clean the printing head and the scanner unit by using a non-abrasive cloth moistened with isopropyl.

Printing roller

1

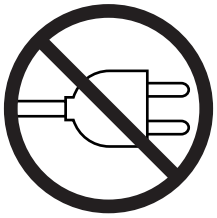

Disconnect the power supply cable and open the device cover (see par. 4.1)

2

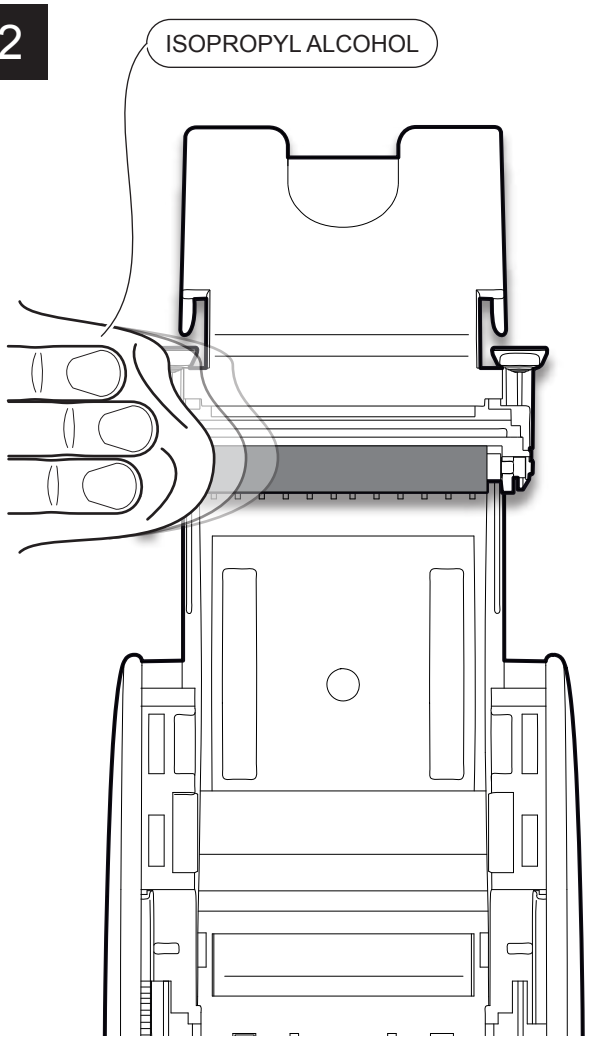

ATTENTION:
Do not use solvents, or hard brushes.
Do not let water or other liquids get inside the machine.

Clean the printing roller by using a non-abrasive cloth moistened with isopropyl.

Cutter

1

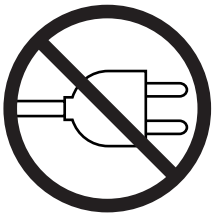

Disconnect the power supply cable and open the device cover (see par. 4.1)

2

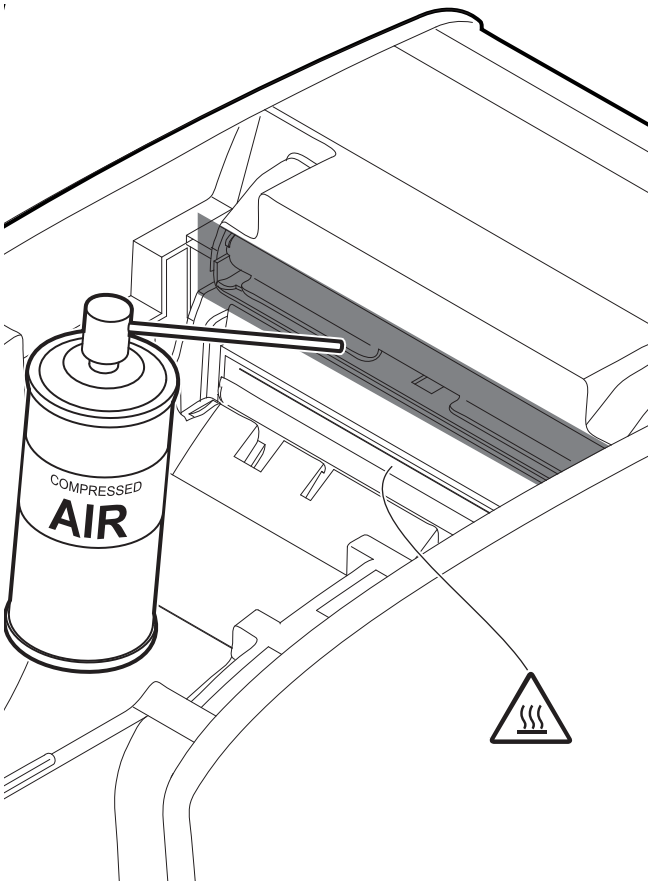

ATTENTION:
Do not use alcohol, solvents, or hard brushes.
Do not let water or other liquids get inside the device.

Clean the cutter compartment from the inside using compressed air.

3

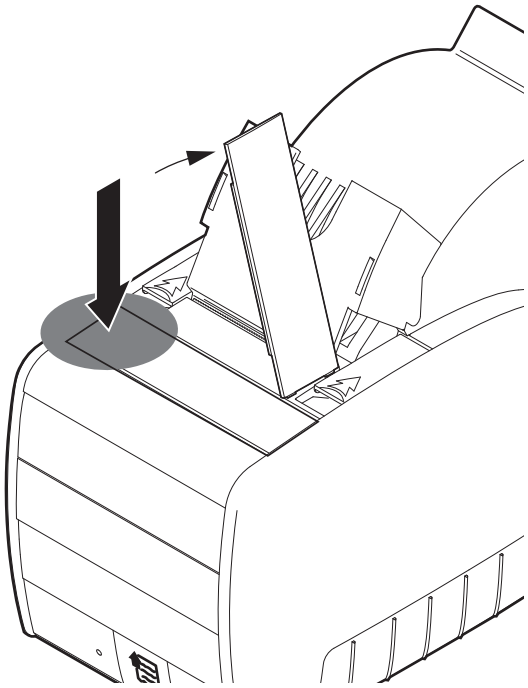

Press slightly the left side
of the cutter cover, so that it opens.

4

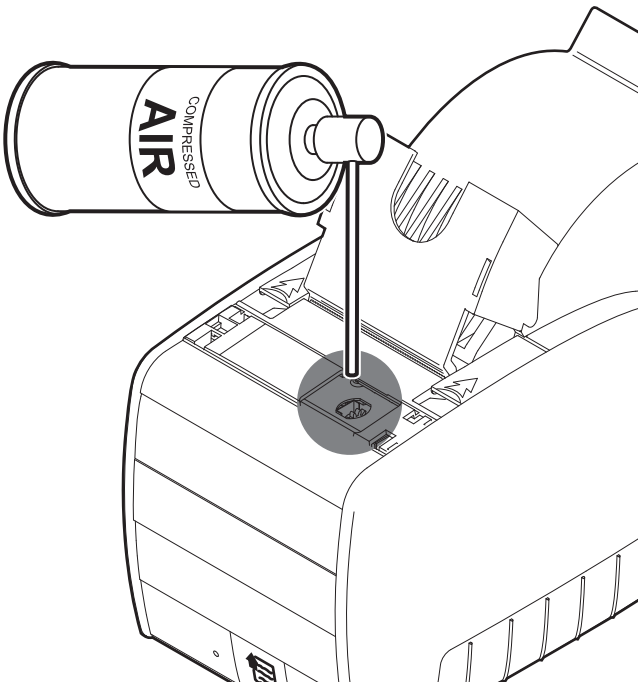

Clean the cutter compartment
using compressed air.

5

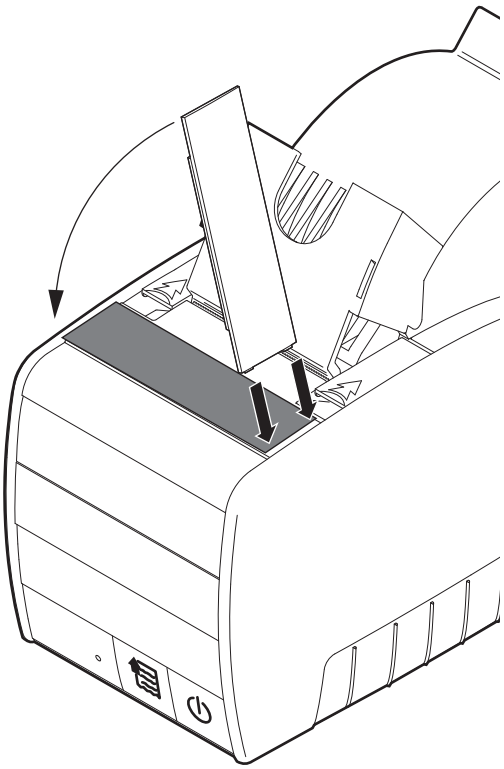

Reassemble the cover removed previously.

Case

1

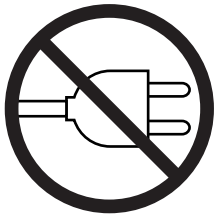

Disconnect the power supply cable

2

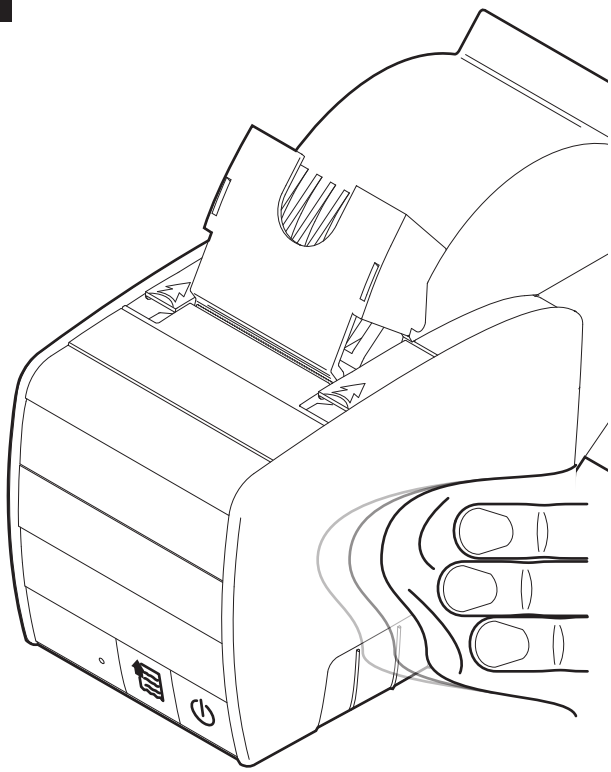

ATTENTION:
Do not use alcohol, solvents, or hard brushes.
Do not let water or other liquids get inside the device.

To clean the device,
use compressed air or a soft cloth.

6.4 Upgrade firmware

WARNING: During communication between PC/device for the firmware update it is strictly forbidden to disconnect the communication cable or to remove the power supply of the devices not to endanger the proper functioning of the device.

NOTES:
The latest firmware of the device is available in the download area of the web site www.custom.biz

Install on the PC used for device upgrading the UPGCEPRN software available in the download area of the web site www.custom.biz.

UPDATE VIA SERIAL INTERFACE

Proceed as follows:

1. Write down the product code (14 digits) printed on the product label (see par. 2.3).
2. Go to the web site www.custom.biz and download the appropriate firmware release from the DOWNLOAD area.
3. Print the SETUP report (see chapter 5).
4. Switch OFF the device.
5. Connect the device to the PC using a serial cable (see paragraph 3.1).
6. Switch ON the device.
7. Launch the software UPGCEPRN.
8. Select the update file .PSW location:

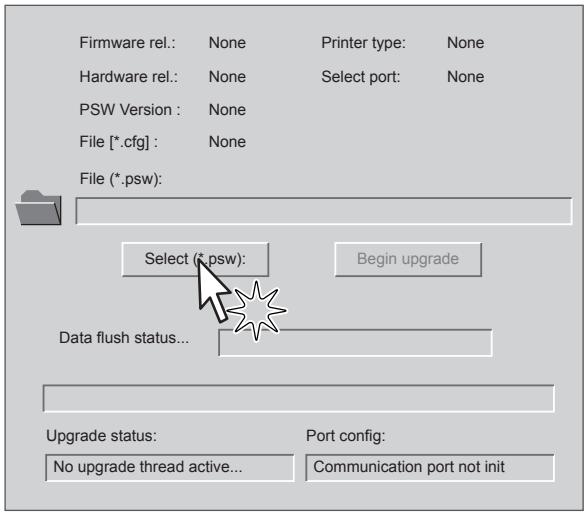

9. Select the serial communication port (ex. COM1):

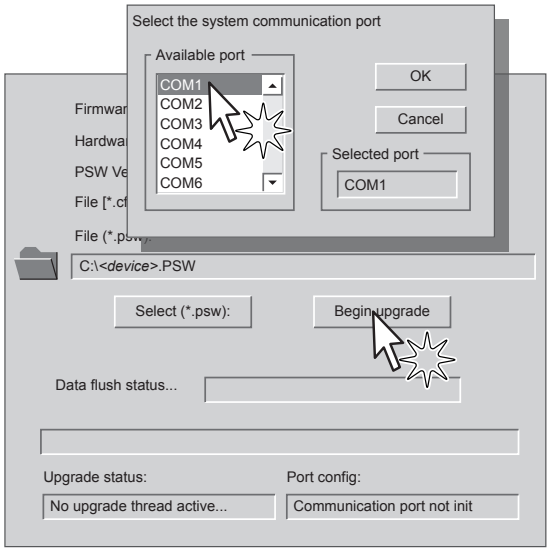

10. Detecting and setting of the parameters necessary for serial communication are performed automatically and then updating begins.
11. After a few minutes a message on the screen warns that the update is completed.

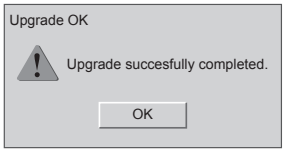

12. Print a new SETUP report to verify the new firmware release (see chapter 5).

UPDATE VIA USB INTERFACE

ATTENTION:
Only during the firmware update, the connection between PC and device must be direct, without the use of wireless HUB.

Only during the firmware update, do not connect or disconnect other USB devices.

NOTE: For communication via USB you must install on PC the device driver available in the download area of the web site www.custom.biz.

Proceed as follows:

1. Write down the product code (14 digits) printed on the product label (see par. 2.3).
2. Go to the web site www.custom.biz and download the appropriate firmware release from the DOWNLOAD area.
3. Print the SETUP report (see chapter 5).
4. Switch OFF the device.
5. Connect the device to the PC using a USB cable (see paragraph 3.1).
6. Switch ON the device.
7. Launch the software UPGCEPRN.
8. Select the update file .PSW location:

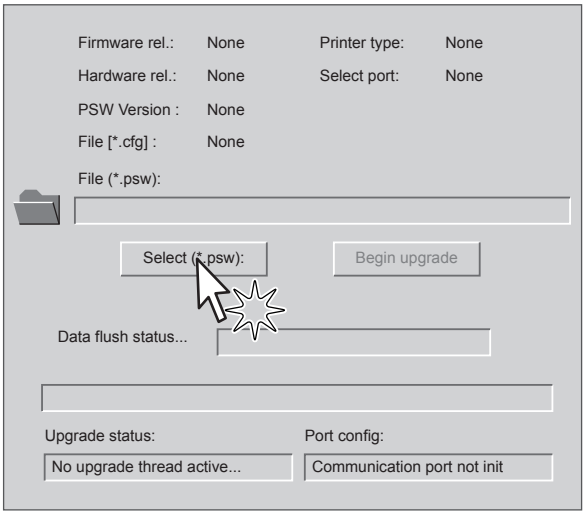

9. Select item USB and then select the USB device among those proposed (eg. KUBEII Lottery):

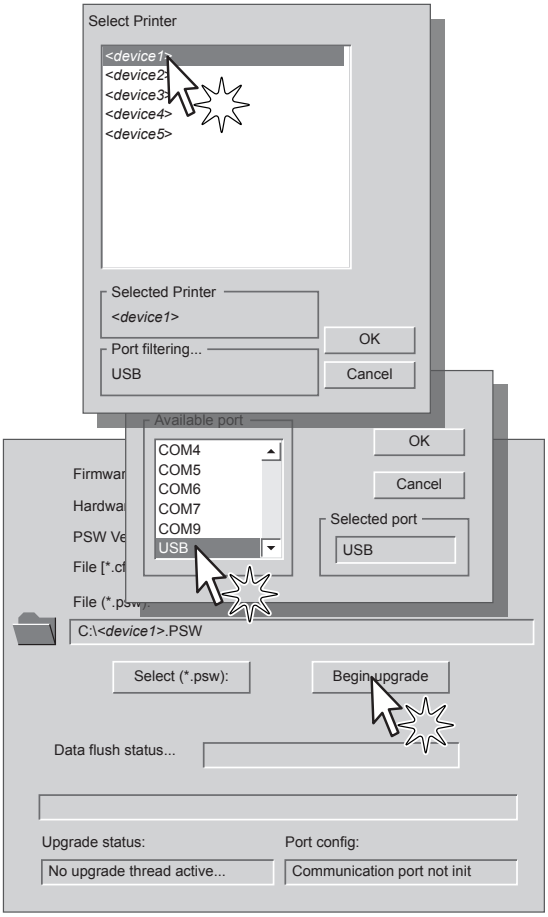

10. After a few minutes a message on the screen warns that the update is completed.

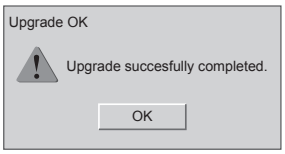

11. Print a new SETUP report to verify the new firmware release (see chapter 5).

7 SPECIFICATION

7.1 Hardware specifications

GENERALS	
Sensors	Paper presence, head temperature, black mark presence, paper presence, cover open, near paper end
MTBF [1]	108350 hours
Emulations	CUSTOM/POS
Printing driver	Windows XP VISTA (32/64bit) Windows 7 (32/64bit) Windows 8 (32/64bit) Windows 8.1 (32/64bit) Opos Linux JavaPOS Android iOS
INTERFACES	
USB Port	12 Mbit/sec (USB 1.1 full speed)
RS232 serial port	from 1200 to 115200 bps
MEMORIES	
Receive buffer	20 Kbytes
Flash memory	512 Mbytes
RAM memory	2 Mbytes
Graphic memory	2 logos (608 x 862 dots)
PRINTER SPECIFICATIONS	
Resolution	203 DPI (8 dot/mm)
Printing method	Thermal, fixed head

Head life [2]	100 Km / 100M pulses
Printing width	76, 80 mm
Printing mode	Normal, 90°, 180°, 270°
Printing format	Height/Width from 1 to 8, bold, reverse, underlined, italic
Character fonts	54 character code tables (see par. 7.6) Extended chinese GB18030-2000, Korean PC949)
Printable barcode	UPCA, UPCE, EAN13, EAN8, CODE39, ITF, CODABAR, CODE93, CODE128, CODE32, PDF417,
Printing speed [2] [3]	High quality = 130 mm/sec Normal = 200 mm/sec High speed = 220 mm/sec, 250 mm/sec [4] [5]
PAPER	
Type of paper	Thermal rolls, heat-sensitive side on outside of roll
Paper width	82.5 ± 0.5 mm
Paper weight	from 70 g/m^2 to 90 g/m^2
Paper thickness	from 75 µm to 85 µm
Recommended paper	KANZAN KP460 MITSUBISHI TL4000, TL1000
External roll diameter	max 150 mm
External roll core diameter	25, 40 mm
Paper end	Not attached to roll core
Core type	Cardboard or plastic
CUTTER	
Paper cut	Total
Estimated life [2]	> 1 000 000 cuts

PRINTER ELECTRICAL SPECIFICATIONS	
Power supply	24 Vdc ±10% (external power supply)
Medium consumption (3)	1 A
Stand-by consumption	0.14 A
ELECTRICAL SPECIFICATIONS POWER SUPPLY cod.963GE020000003	
Power supply voltage	from 100 Vac to 240 Vac
Frequency	from 50 Hz to 60 Hz
Current (output)	2.5 A
Power	60W
ENVIRONMENTAL CONDITIONS	
Operating temperature	from 0°C to +50°C
Relative humidity	from 10% Rh to 85% Rh
Storage temperature	from -20 °C to +70 °C
Storage relative humidity	from 10% Rh to 90% Rh

NOTES:
(1) : Electronic board.
(2) : Respecting the regular schedule of cleaning for the device components.
(3) : Referred to a standard CUSTOM receipt (L=10cm, Density = 12,5% dots on).
(4) : This speed is achieved in the following test conditions: parameter "Speed / Quality" = High Speed, Print Density = 0%, Ambient Temperature = 25 ° C, Power Supply 24Vdc.
(5) : Possibility through Firmware configuration up to 250 mm/sec. respecting the test conditions described in note 4 and using paper MITSUBISHI TL4000.

7.2 Character specifications

Character set		3	
Character density	11 cpi	15 cpi	20 cpi
Number of columns	35	45	64
Character / sec	2600	3352	4700
Lines / sec	73	73	73
Characters (L x H mm)-Normal	2.25 x 3	1.75 x 3	1.25 x 3

NOTE: Theoretical values. (Printing width = 80 mm).

7.3 Device dimensions

Length	297.5 mm (with cover closed) 390 mm (with cover open)
Height	216 mm (with cover closed) 345 mm (with cover open)
Width	140 mm
Weight	2495 g

NOTES:
Dimensions referred to devices without paper roll.
All the dimensions shown in following figures are in millimetres.

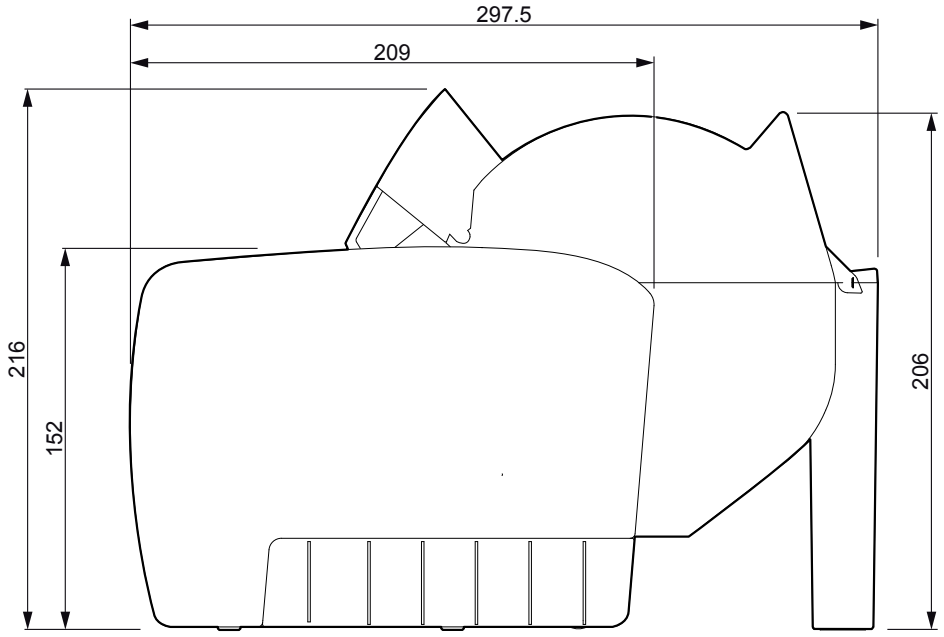

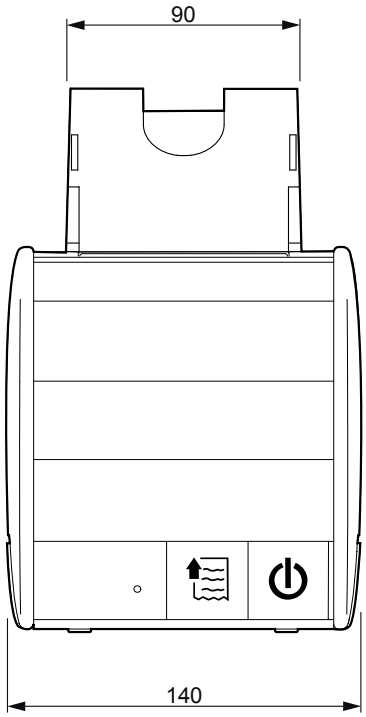

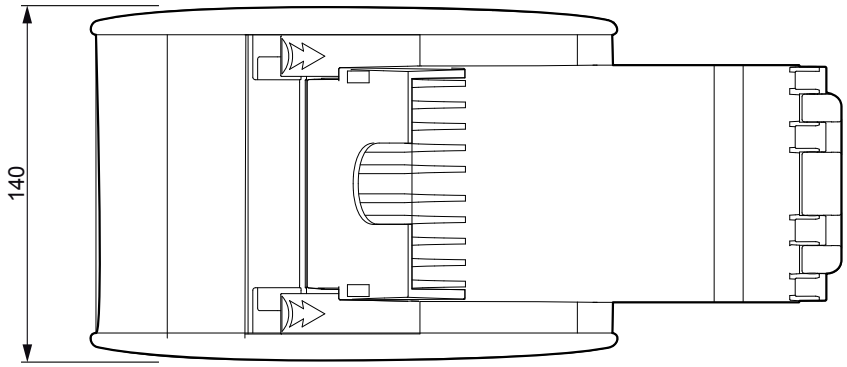

7.4 Power supply dimensions cod. 963GE020000003

Length	127 mm
Height	35.5 mm
Width	56 mm

NOTE: All the dimensions shown in following figures are in millimetres.

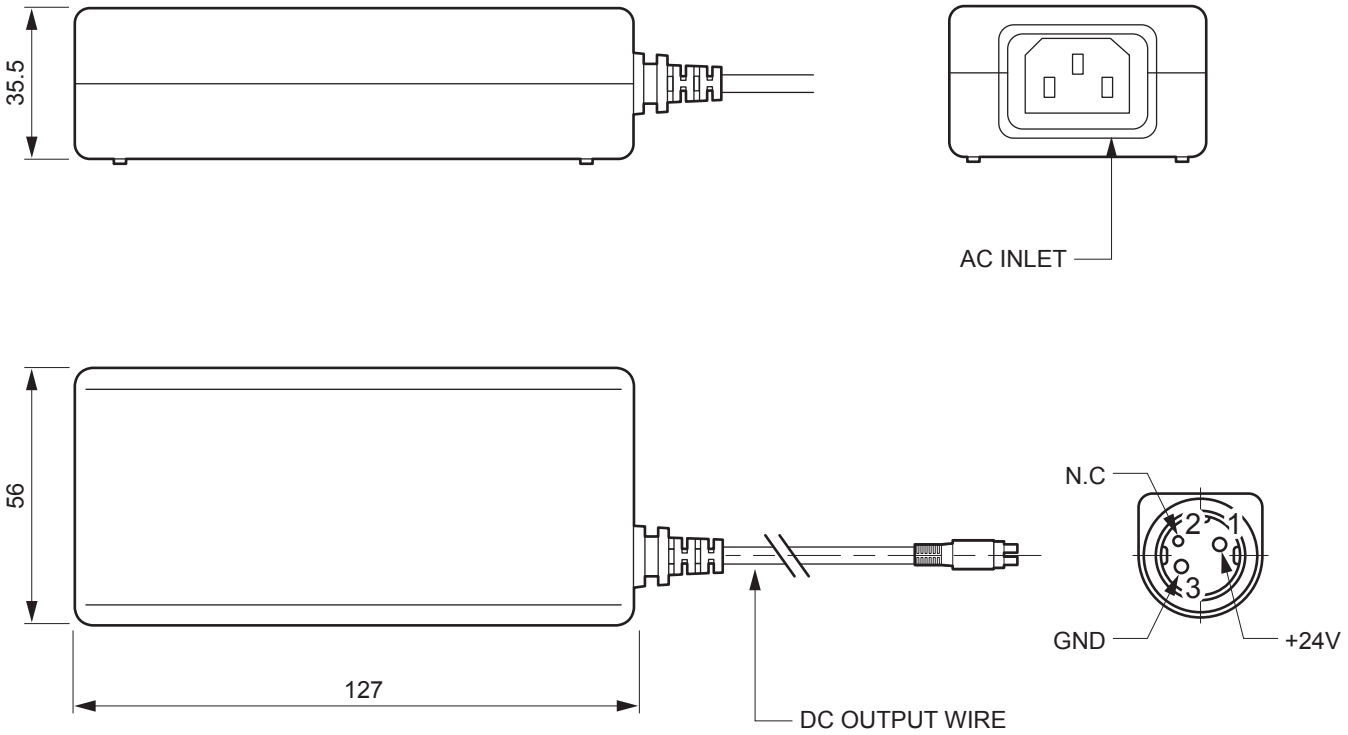

7.5 Paper specification

Paper with black mark alignment for fixed sensor

The following image shows the placement of the black mark on the non-thermal side of paper.
For more information about the use of paper with black mark see chapter 10.

NOTE: All the dimensions shown in following figures are in millimetres.

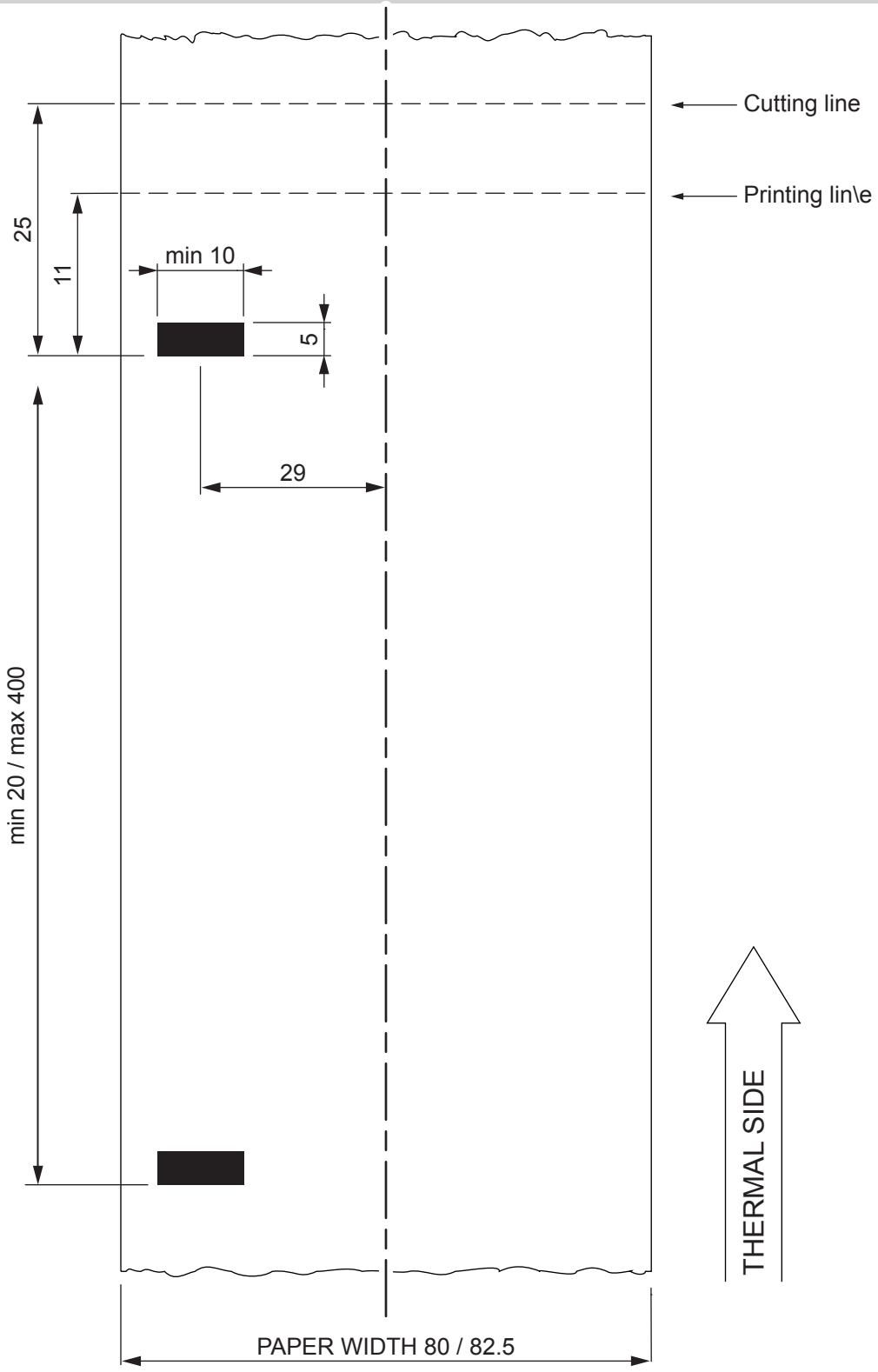

Features receipt paper

The following figure shows an example of roll paper receipts with alignment black mark on the thermal side.

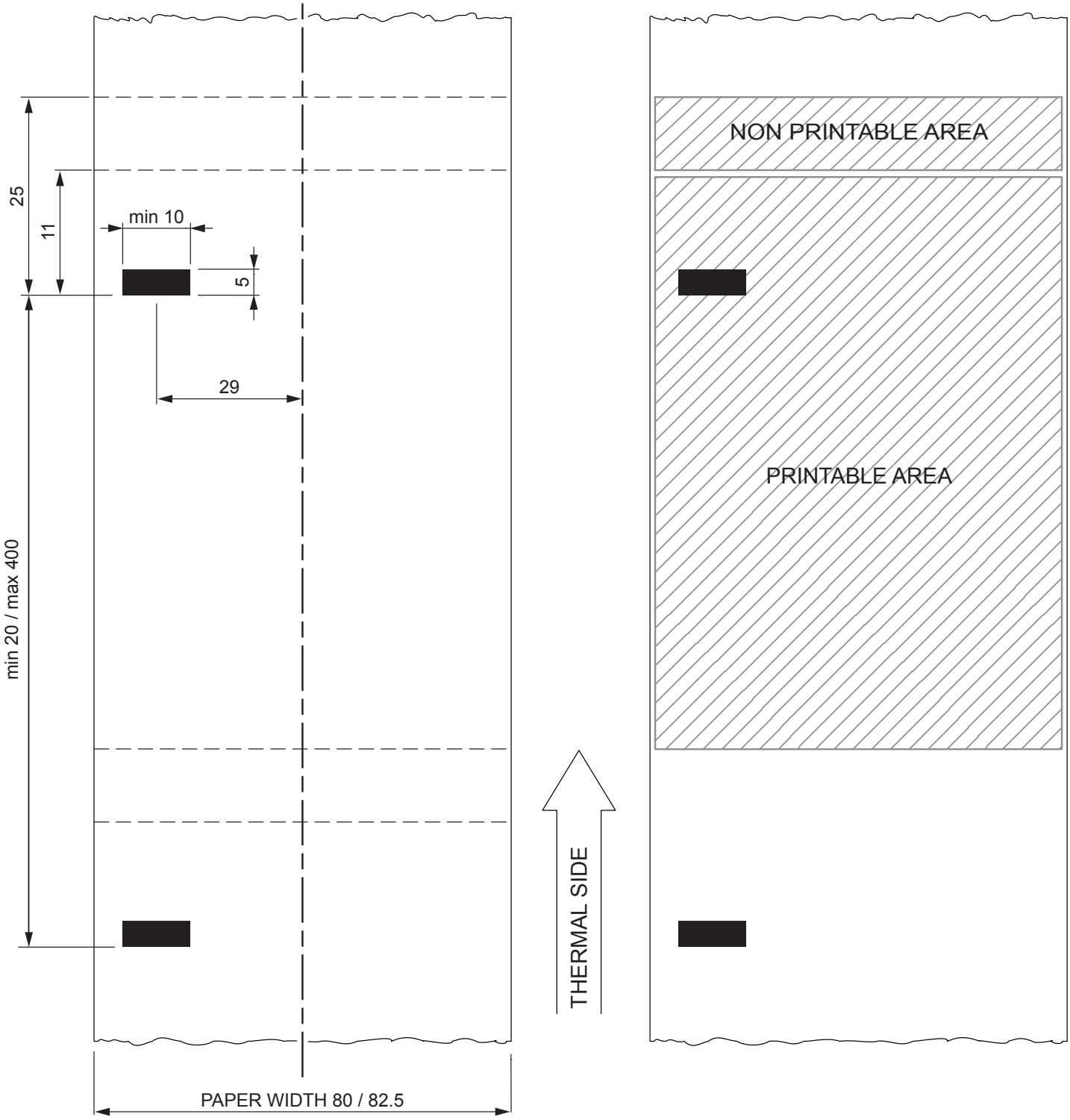

7.6 Character sets

The device has 3 fonts of varying width (11, 15 and 20 cpi) which may be related one of the coding tables provided on the device.

To know the coding tables actually present on the device, you need to print the font test (see par.2.4).

You can set font and coding table by using the commands (see the Commands Manual of the device) or using the “Code Table” and the “Chars / Inch” parameters during the Setup procedure (see par.5.4).

The following is the full list of coding tables that can be installed on the device.

<CodeTable>	Coding table	
0	PC437 - U.S.A., Standard Europe	
1	Katakana	
2	PC850 - Multilingual	
3	PC860 - Portuguese	
4	PC863 - Canadian/French	
5	PC865 - Nordic	
11	PC851 - Greek	on request
12	PC853 - Turkish	on request
13	PC857 - Turkish	on request
14	PC737 - Greek	on request
15	ISO8859-7 - Greek	on request
16	WPC1252	
17	PC866 - Cyrillic 2	
18	PC852 - Latin 2	on request
19	PC858 with Euro symbol in position 213	
20	KU42 - Thai	on request
21	TIS11 - Thai	on request
26	TIS18 - Thai	on request
30	TCVN_3 - Vientamese	on request
31	TCVN_3 - Vientamese	on request
32	PC720 - Arabic	on request
33	WPC775 - Baltic Rim	on request
34	PC855 - Cyrillic	on request
35	PC861 - Icelandic	on request

<CodeTable>	Coding table	
36	PC862 - Hebrew	
37	PC864 - Arabic	
38	PC869 - Greek	on request
39	ISO8859-2 - Latin 2	on request
40	ISO8859-15 - Latin 9	on request
41	PC1098 - Farci	on request
42	PC1118 - Lithuanian	on request
43	PC1119 - Lithuanian	on request
44	PC1125 - Ukranian	on request
45	WPC1250 - Latin 2	
46	WPC1251 - Cyrillic	
47	WPC1253 - Greek	
48	WPC1254 - Turkish	
49	WPC1255 - Hebrew	
50	WPC1256 - Arabic	
51	WPC1257 - Baltic Rim	
52	WPC1258 - Vientamese	
53	KZ1048 - Kazakhstan	on request
255	Space page	

8 CONSUMABLES

The following table shows the list of available consumables for device:

DESCRIPTION	CODE
THERMAL PAPER ROLL weight = 78g/m^2 width = 82.5mm Ø external = 150mm Ø core = 25mm	**67300000000415** 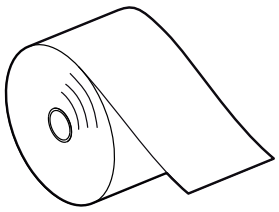
THERMAL PAPER ROLL weight = 78g/m^2 width = 82.5mm Ø external = 48mm Ø core = 25mm	**67300000000417** 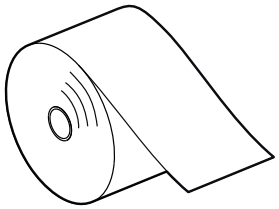

9 ACCESSORIES

The following table shows the list of available accessories for device:

DESCRIPTION	CODE
POWER SUPPLY (for technical specifications, see the paragraph 7.1)	**963GE020000003** 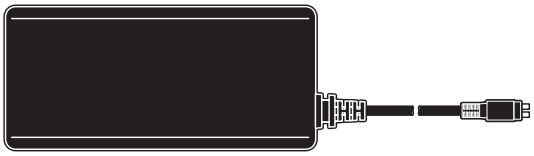
RIGHT AND LEFT SIDES KUBE color: black (see the paragraph 9.1)	**976BG010000002** 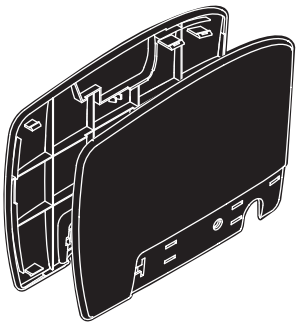

9.1 Sides replacement

To replace the printer side (right or left), proceed as follows:

1

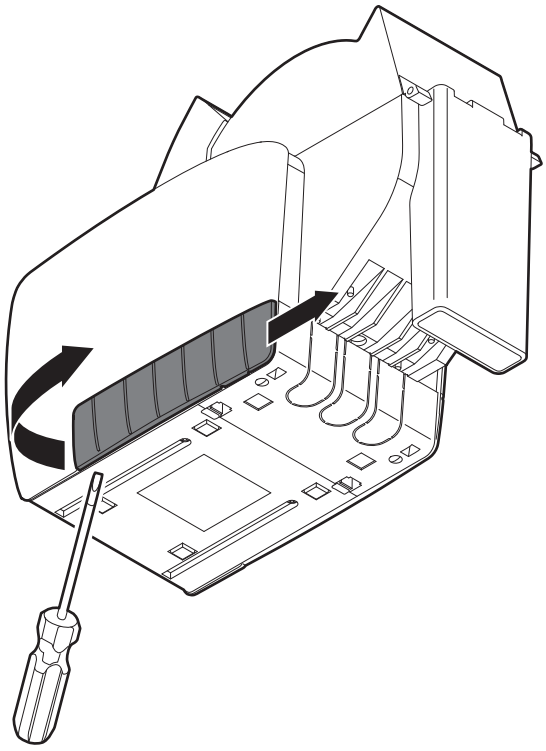

Remove the carter on the printer side using a screwdriver.

2

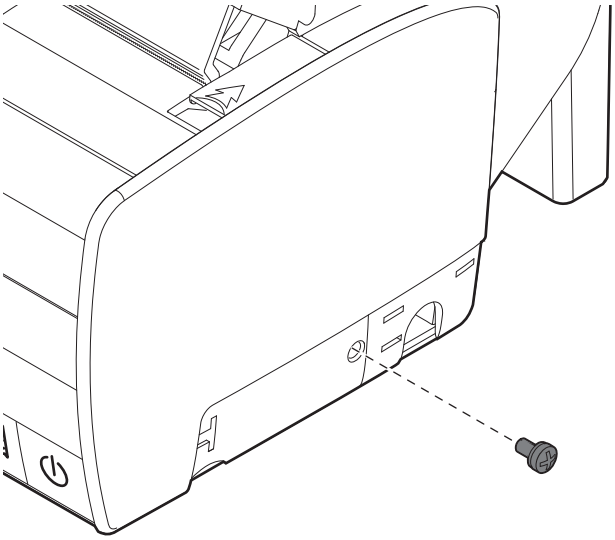

Unscrew the fixing screw for the printer side.

3

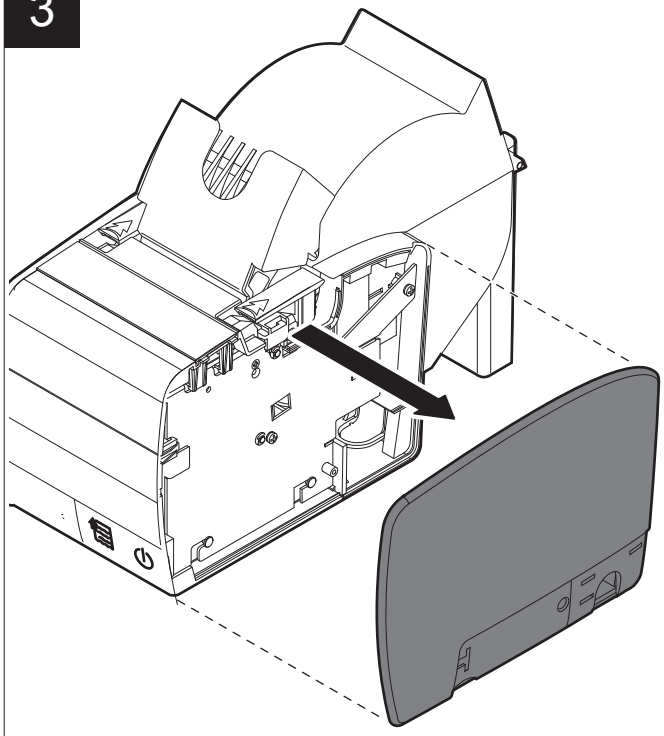

Remove the printer side.

4

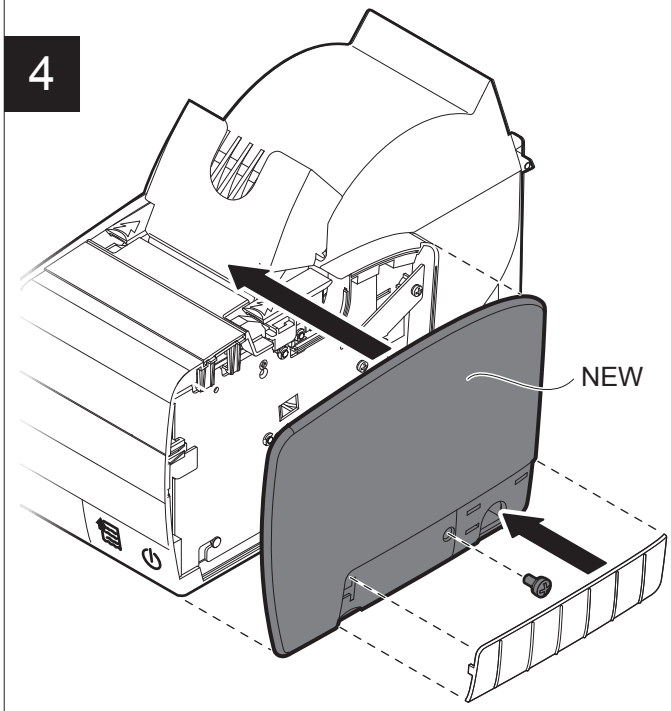

Assemble the new side performing the previous operations in reverse order.

10 ALIGNMENT

Device is provided with a sensor for the use of alignment notch in order to handle roll of tickets with pre-printed fields and a fixed length;

The alignment notch may be formed by black mark printed on paper (see par.7.6).

The alignment sensor assembled on the device is “reflection” sensor: this kind of sensor emits a band of light and detects the quantity of light reflected to it. The presence of the notch is therefore detected by the amount of light that returns to the sensor, considering that the light is reflected by the white paper and absorbed by the black mark.

The following paragraphs show how to correctly set the configuration parameters of device in order to assure the alignment.

10.1 Enable alignment

Device is provided with one mobile sensor facing the thermal side of paper.
To guarantee the alignment, you must enable the parameter “Notch Alignment” during the Setup procedure (see chapter 5)

SENSOR USED (see following figures)	VALUE OF THE “NOTCH ALIGNMENT” PARAMETER	USING MODE OF SENSOR	BLACK MARK TYPE
-	Disabled	-	Alignment disabled
1	Enabled	Reflection	Black mark printed on the thermal side of paper

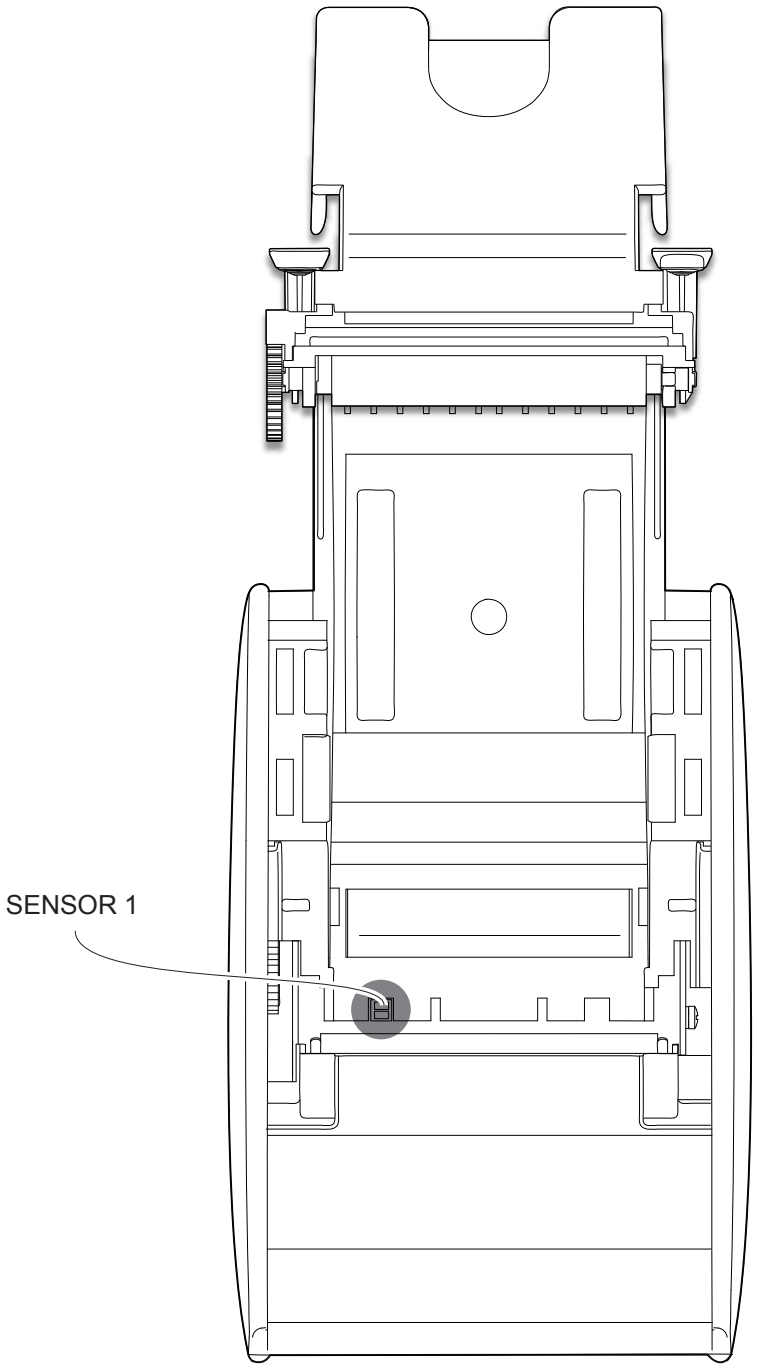

Paper with black mark on the thermal side

In the standard model the detection of black mark and paper presence is performed by the fixed sensor.

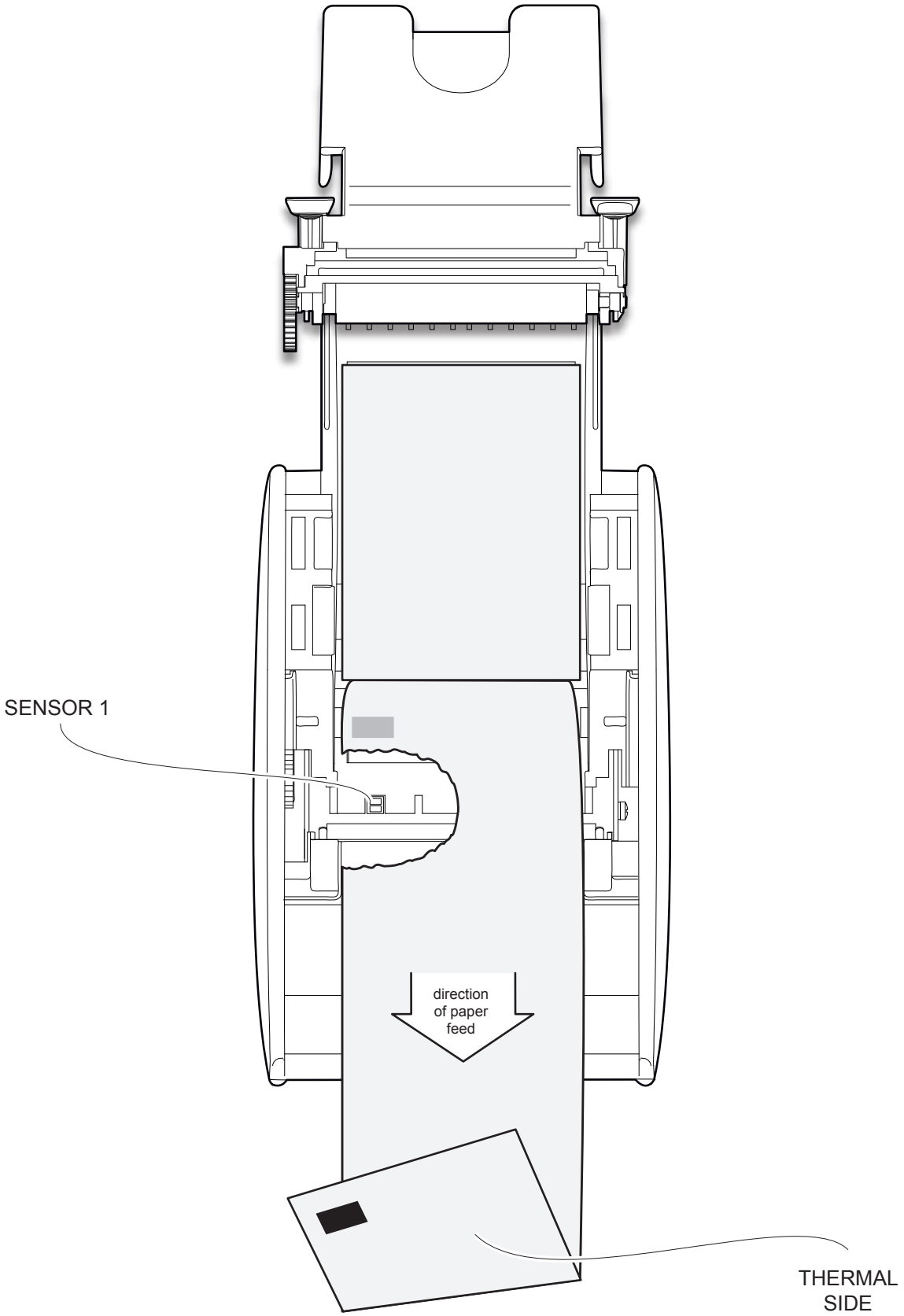

10.2 Calibration

The sensor calibration occurs automatically and consists in adjusting the quantity of light emitted to match the degree of whiteness of the paper used and the degree of black of the mark printed on paper.

The device automatically performs the self-calibration during the Setup procedure only if the “Notch Alignment” parameter is set to “Enabled” value (see chapter 5).

When self-calibration starts, the device performs some paper feeds and then it prints the calibration result and the value (numeric and as a percentage) of the *“Threshold White”* parameter that indicates the power-up level of the sensor emitting side (the value ranges from 0V to 5V):

Autosetting Notch : OK
Threshold White : 2.00V [39%]

The “Autosetting Notch” parameter indicates the result of the self-calibration procedure; OK will appear if it has been successful, NOT OK will appear if the procedure has failed.

After the printing of the procedure result, the device offers the execution of the function of paper characterization “Characterize Paper” and the change of the “Notch Threshold” parameter which represents the detection threshold of the black mark. Choosing the “Yes” value for the “Characterize Paper” parameter, the device prints a graphic representation (see following figures) of the outgoing voltage of the alignment sensor (expressed as a percentage) and the “Notch Threshold” value. This graphic representation is useful to set the most suitable value to assign to the “Notch Threshold” parameter and then to better identify the optimal threshold value which takes into account the variations of the signal and the small oscillations around zero.

The following figure shows an example of paper with the non-thermal paper printed with black marks: the outgoing voltage is constant while passing the white paper between two black marks and presents a peak at each black mark.
In this case, the optimal value for the “Notch Threshold” parameter is placed about half of the peak.

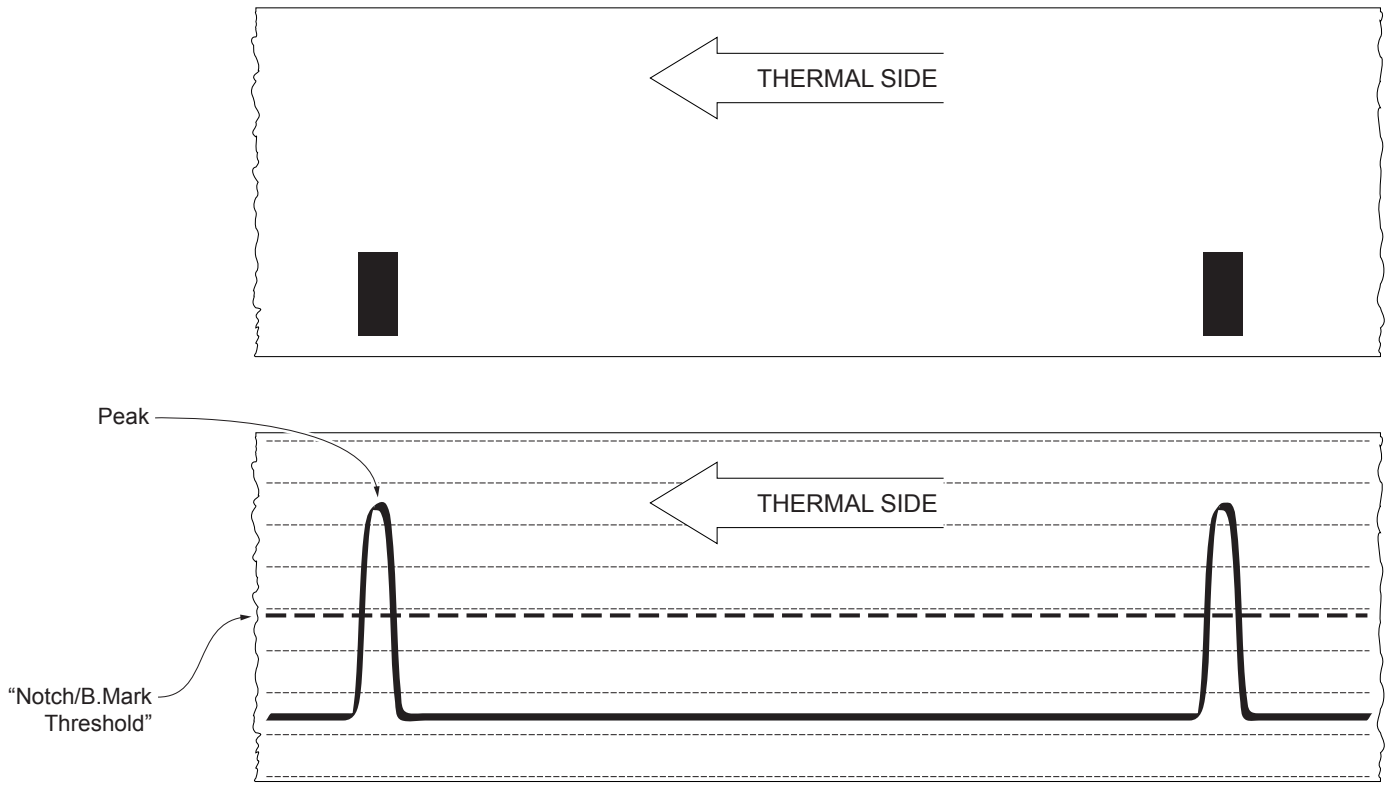

The following figure shows an example of paper with the non-thermal paper printed with black marks and other graphics (for example, a barcode): the outgoing voltage is constant while passing the white paper between two black marks, presents a peak at each black mark and presents some “noise” at each barcode.
In this case, the optimal value for the “Notch Threshold” parameter is located about halfway between the peak value and the maximum value of the “noise”.

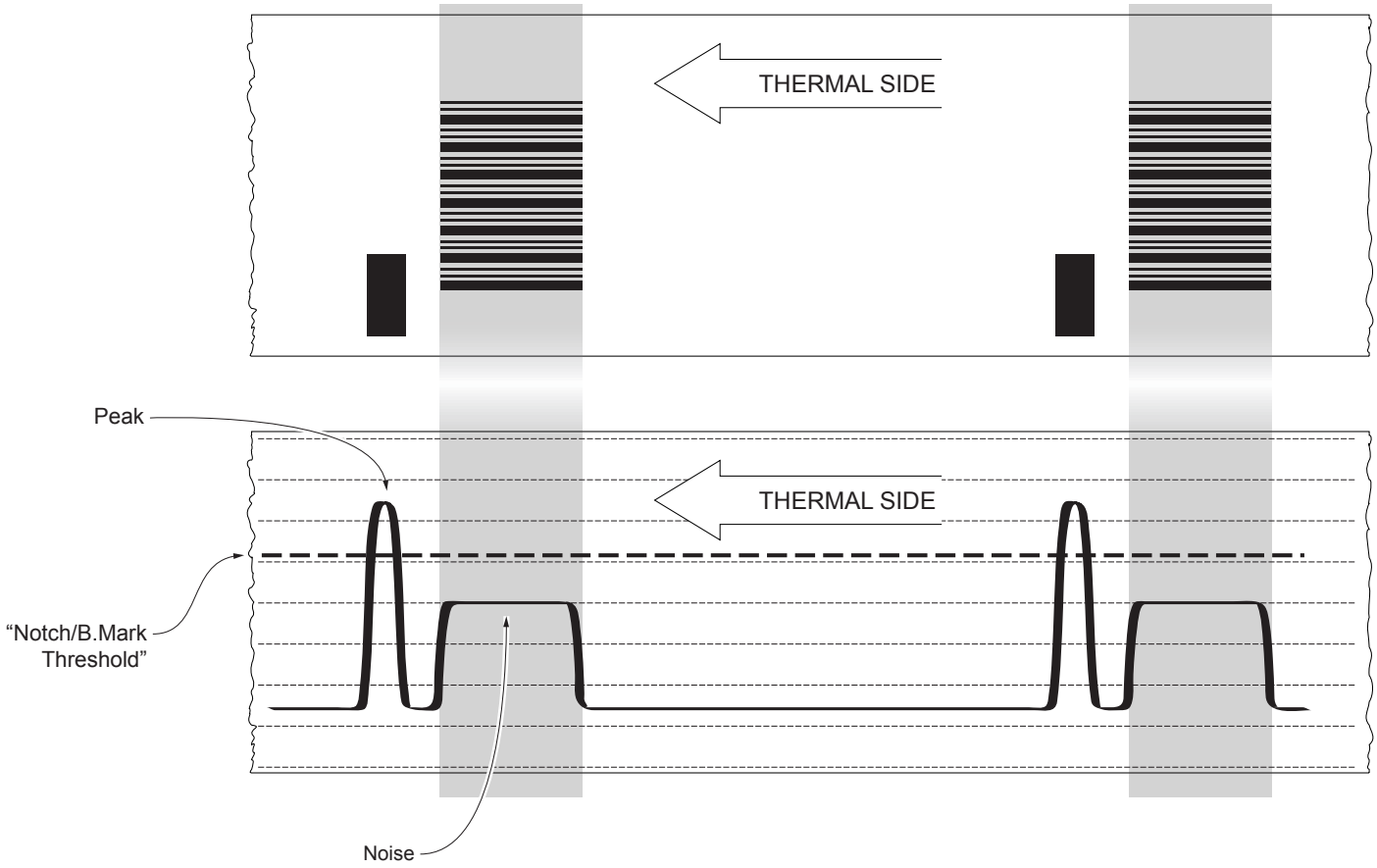

If the maximum value of “noise” read by the sensor is very close to the peak value, it might be difficult to place the value of the “Notch/B.Mark Threshold” at an intermediate point. In these cases, it is mandatory that the portion of paper between the point of printing end and the front black mark is completely white (no graphics). In this way, the only next graphic detected by the sensor for alignment after the printing end will be the black mark.

10.3 Alignment parameters

The “alignment point” is defined as the position inside the ticket to use for the black mark alignment.
The distance between the black mark edge and the alignment point is defined as “Notch Distance”.

“Notch/Distance” value varies from 0mm minimum and 99.9 mm maximum.

If the “Notch Distance” value is set to 0, the alignment point is set at the beginning of the black mark.

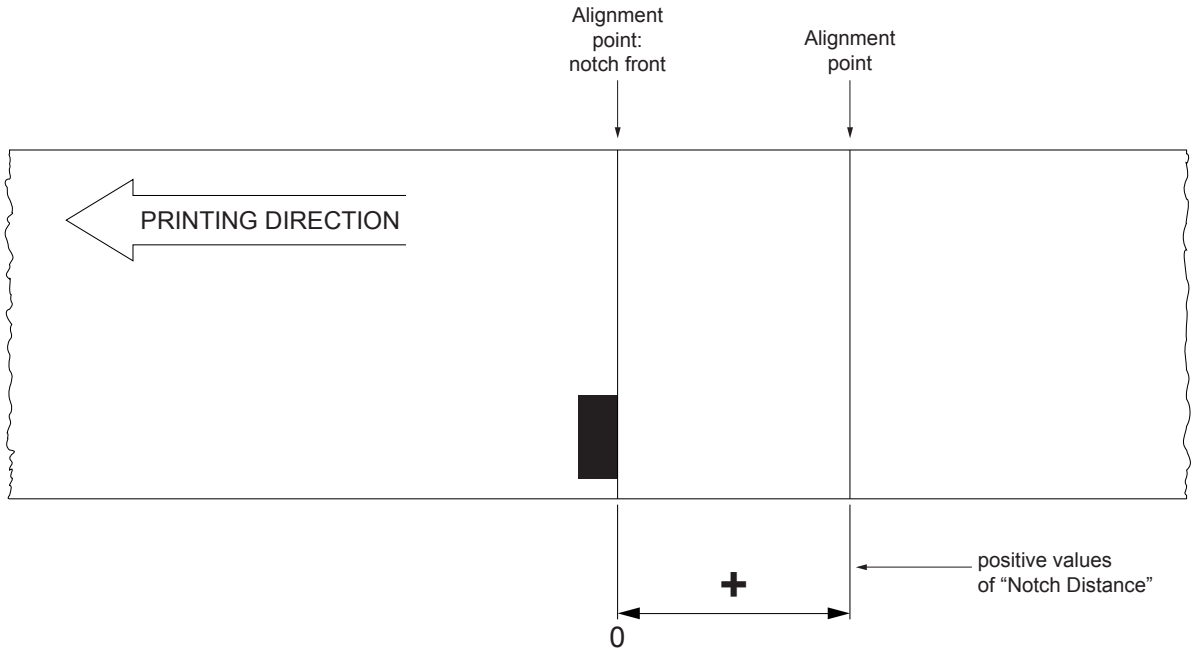

The following figure shows a section of the device with the paper path and the distances between the alignment sensor, the printing head and the cutter (cutting line), where:

NOTE: The dimension shown in following figures are in millimetres.

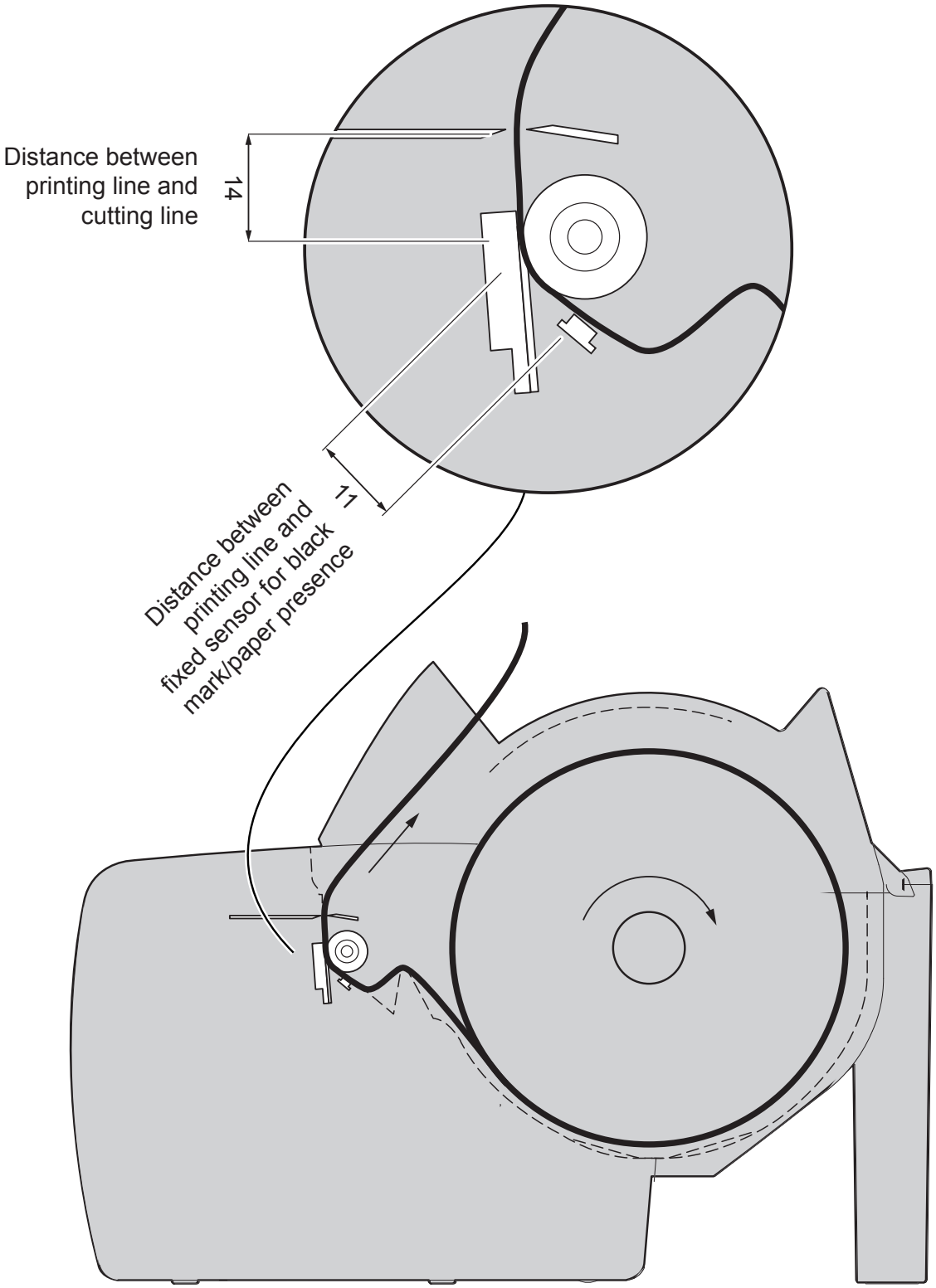

CUSTOM/POS EMULATION

To define the alignment point you need to set the device parameters that compose the numerical value of the “Notch Distance” parameter. (see par.5.4).
For example, to set a notch distance of 15mm between the notch and the alignment point, the parameters must be set on the following values:

Notch Distance Sign	: +
Notch Distance [mm x 10]	: 1
Notch Distance [mm x 1]	: 5
Notch Distance [mm x .1]	: 0

The “Notch Distance” parameter, may be modified as follows:
- during the Setup procedure of the device (see chapter 5)
- by using the 0x1D 0xE7 command (for more details, refer to the Commands Manual)
- by driver

10.4 Printing area

In order to print ticket containing only one notch and to not overlay printing to a notch (that will make it useless for the next alignment), it is important to well calibrate:

- The height of the printing area of ticket according to the inter-notch distance

The following figure shows an example of tickets with “Notch Distance” set to 0:

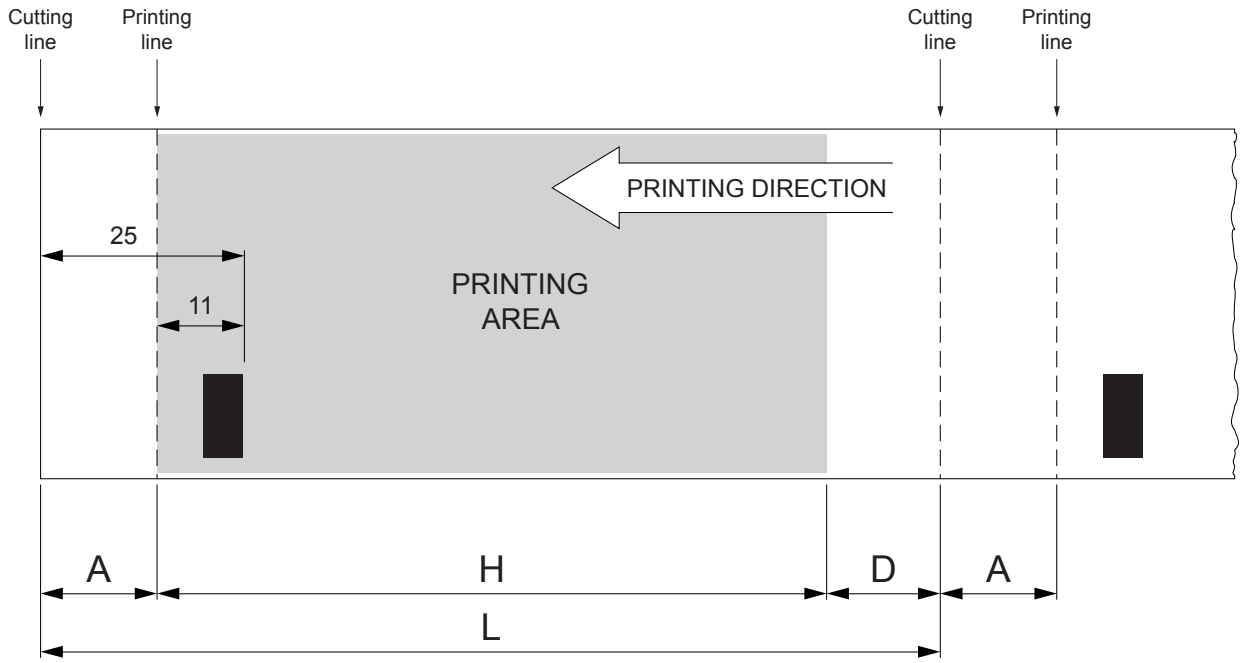

“Non-printable area” of 14 mm generated from:

“Distance between cutter/printing head” - “Value for the paper recovery after a cut”

where:
“Distance between printhead and cutter” = 25 mm (fixed distance)
“Value for the paper recovery after a cut” = 11 mm,

H Distance between the first and the last print line, called “Height of the printing area”.

L Distance between an edge of the black mark and the next one, called “Inter-notch distance”.

D Automatic feed for alignment at the next black mark.

To use all the black marks on the paper, you must comply with the following equation:

$$H + A \leq L$$

The height of the printing area H can be increased to make no progress on alignment D but no further.

11 TECHNICAL SERVICE

In case of failure, send the 4 pieces of information listed below to our support team:

1. Product code
2. Serial number
3. Hardware release
4. Firmware release

To get the necessary data, proceed as follows:

1

Write down the data printed
on the product label (see paragraph 2.3)

2

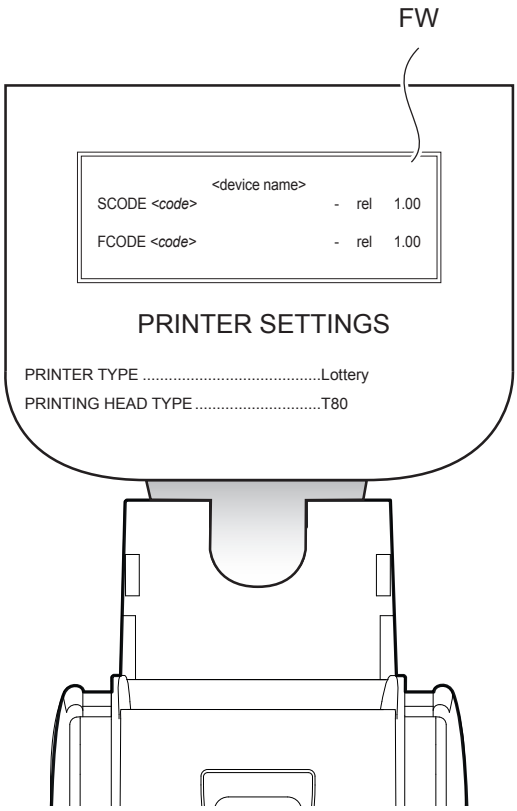

Print a Setup report (see paragraph 5.1)
The Setup report shows
the firmware release

3

Customer Service Department:

support@custom.it
(worldwide)

or

support@customamerica.com
(specific for North/South American customers)

Send an e-mail to the Technical Service,
with the data collected.

Part Number : 762000000060xx Rev. 1.30

CUSTOM S.p.A.
World Headquarters
Via Berettine, 2/B - 43010 Fontevivo, Parma ITALY
Tel. +39 0521 680111 - Fax +39 0521 610701
info@custom.biz - www.custom.biz

All rights reserved