Bethpage Dining Chair Multicolor Print & Green

Item #: 109367

The Bethpage Dining Chair has a polyester velvet covered seat over a powder coated steel frame. This chair works great in any space, hospitality or residential. The shape and design are glam, modern, deco and boho all at the same time.

Assembly required (Y or N) : Yes

Ships By : Ground

Product Details

Colors	: Green, Multicolor
Leg Colors	: Black
Materials	: Printed Fabric 100% Polyester, Velvet 100% Polyester, Plywood, Powder Coated Steel
Upholstery Materials	: Velvet, Printed Fabric
Product Types	: Dining Chair
styles	: Modern
Trend	: Modern
Assembly Required	: Yes
Stackable	: No
Weight Capacity (lbs.)	: 310
Adjustable Height	: No
Removable Cushion Cover	: No
Washable Removable Cover	: No
Swivel	: No
Wheels	: No
Ships By	: Ground
Country of Origin	: China
Item Status	: MD
UPC	: 842896152148

Product Dimensions

Product 1 (in)	: 19.7" W x 23.2" D x 33.5" H
Product 1 Weight (lbs.)	: 12.8
Seat (in)	: 18.9" SW x 20.5" SD x 18.5" SH

Packaging
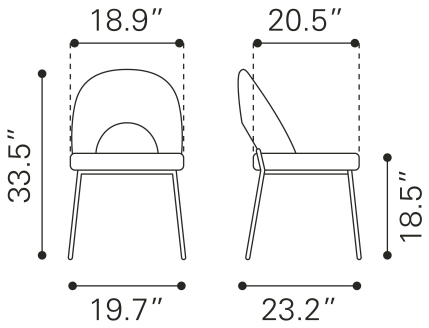
Total Net Weight (lbs.)	: 26
Total Gross Weight (lbs.)	: 31
Total Cubic Feet (CF/ ft3)	: 7.274
Total Cubic Meter (CBM/ m3)	: 0.206
Total # of Cartons	: 1
Carton 1 (in)	: 23 W x 27 L x 21 H
Carton 1 Weight (lbs.)	: 31