OVS

OVERLAND VEHICLE SYSTEMS

Hub Centric Ground Tent Instructions

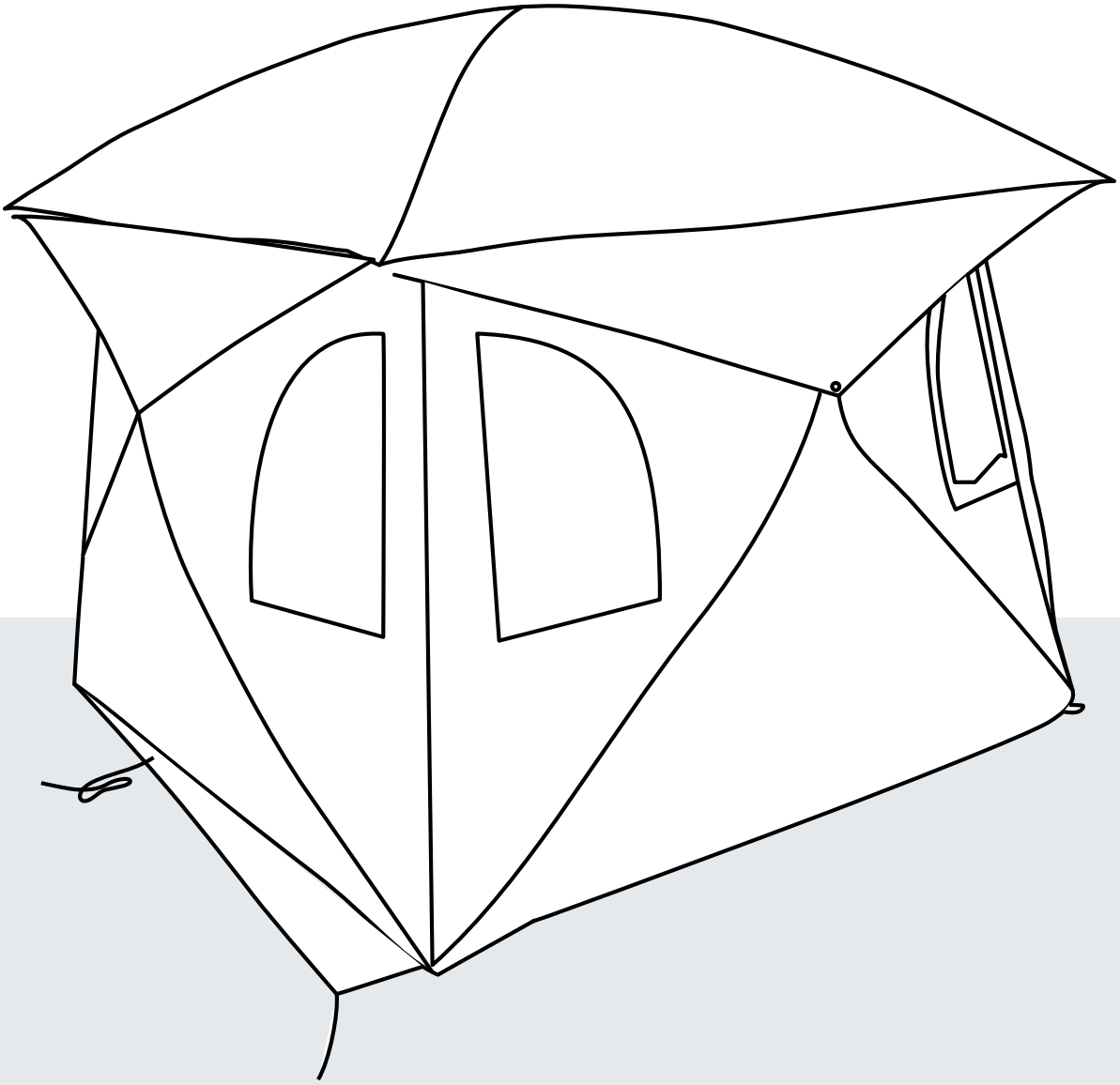

CAREFULLY READ INSTRUCTIONS PRIOR TO THE FIRST USE OF THE HUB CENTRIC GROUND TENT

APRIL 2026

WHAT YOU NEED TO GET STARTED

COMPONENTS

- **1x Push Out Tent**
- **1x Rainfly**
- **2x Rainfly Poles**
- **1x External Tarp**
- **1x Push Out Point Padding**

1

Remove all components from duffel bag

Unbuckle the Storage Strap on the collapsed tent

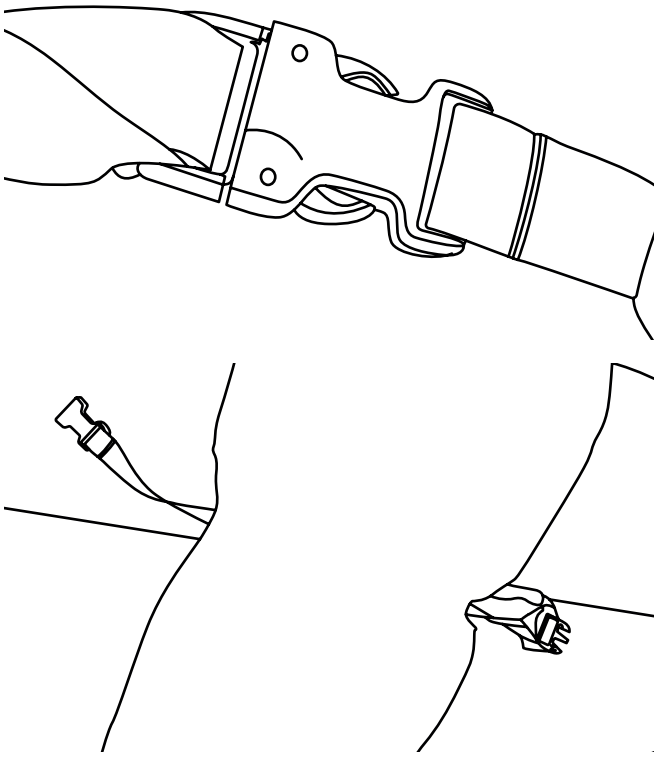

2

Stand the collapsed tent upward

Pull the center panel strap handles in order to pop the tent outward

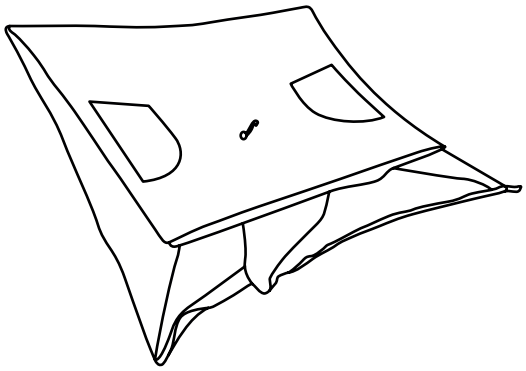

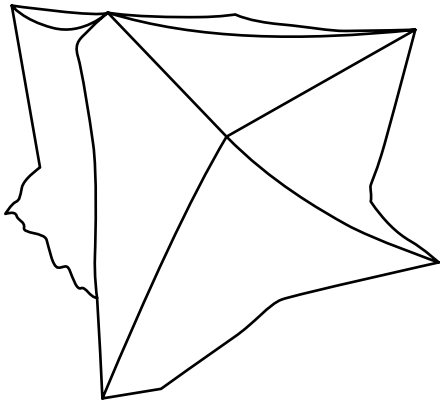

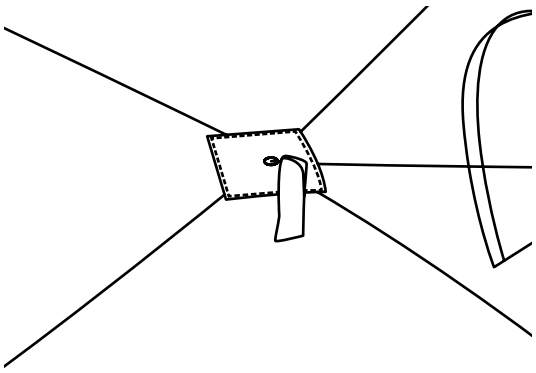

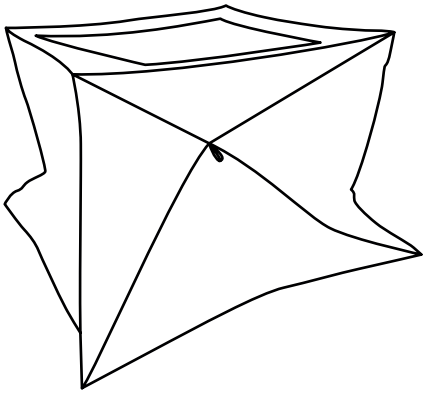

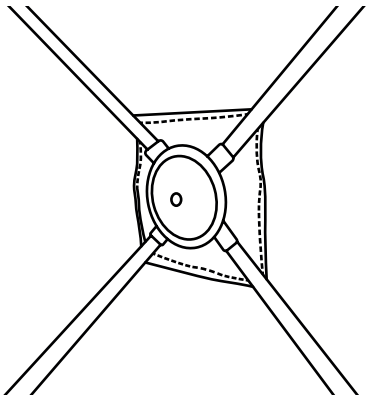

Once all side wall panels are complete, open one of the tent entry ways

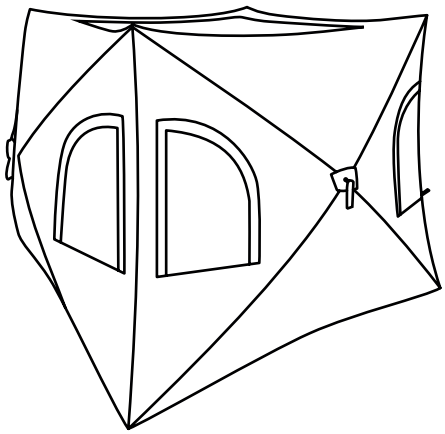

3

Push the center skylight tab upward

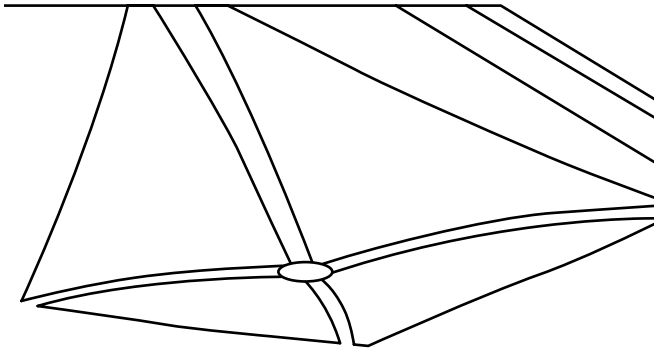

Attach the pull handle for future reference, when closing the tent

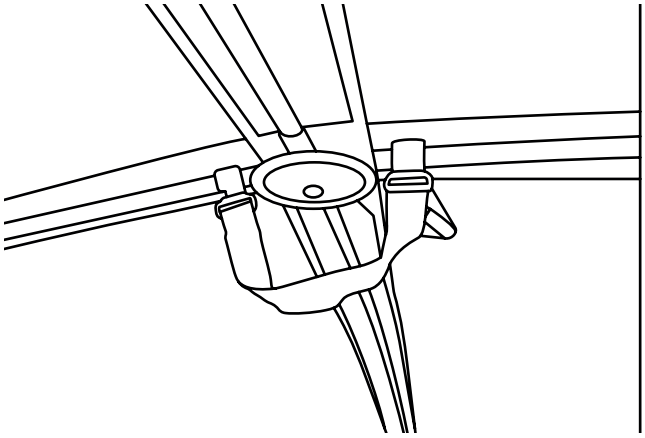

4

To set up the rainfly poles, insert the pole into the corner sleeve

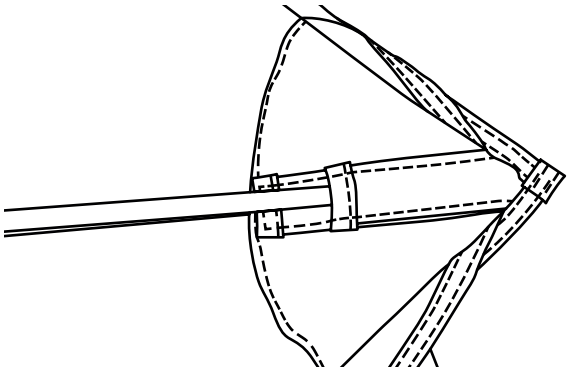

Attach the small velcro patches to the pole

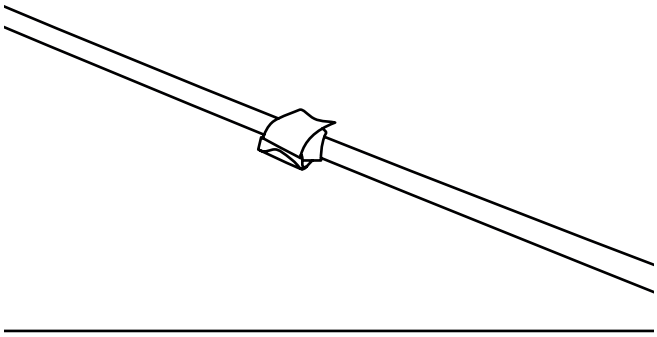

Slip the poles toward the middle and a create a knot for both poles to enter and keep stable

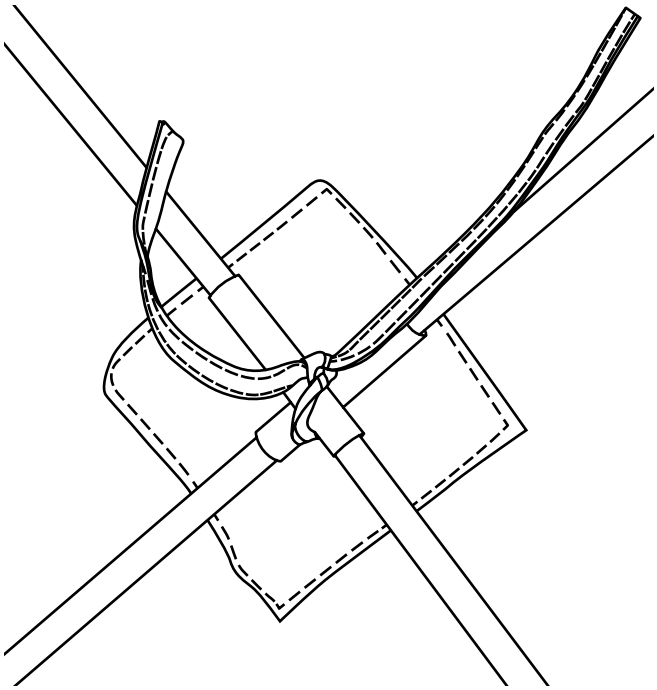

Attach the next small velcro patches to the pole

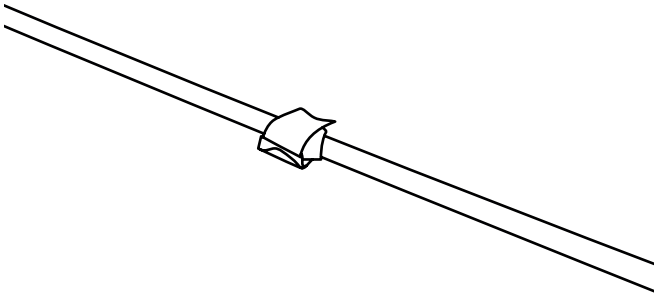

Insert the pole into the opposite corner

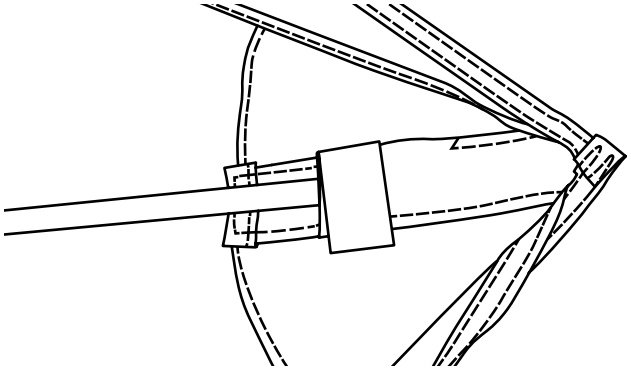

Repeat for the other cross-pole

Your rainfly should create a square that you will then position on top of your Hub Centric Tent

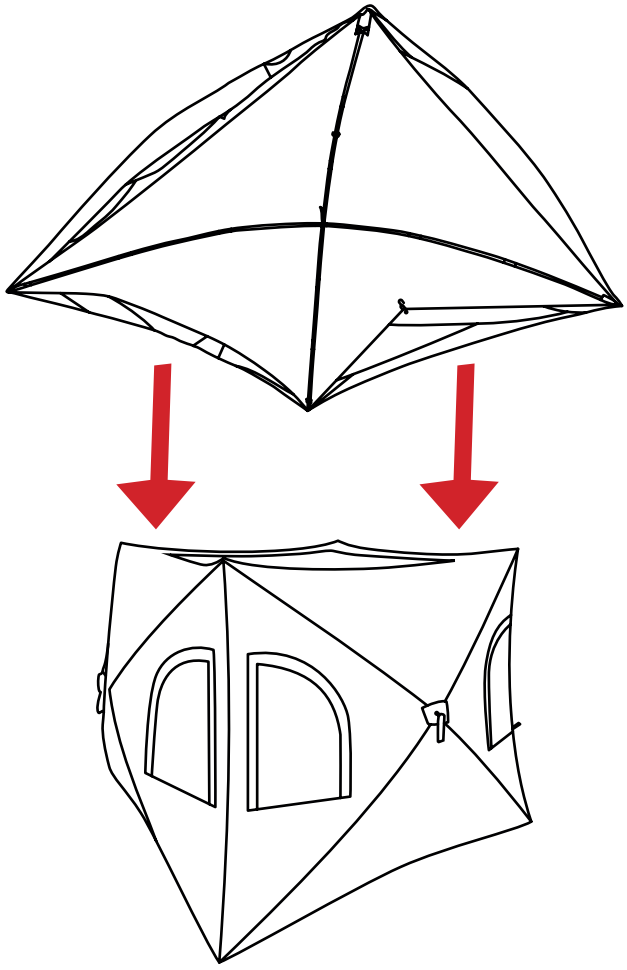

Attach all hooks to all 4 sides of the tent

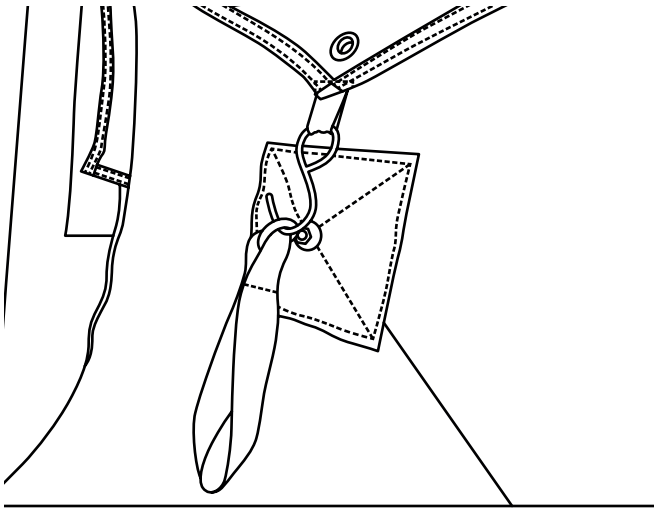

5

When closing the tent, unhook all rainfly hooks from their anchor points. Also make sure you have all guide lines and stakes removed before proceeding

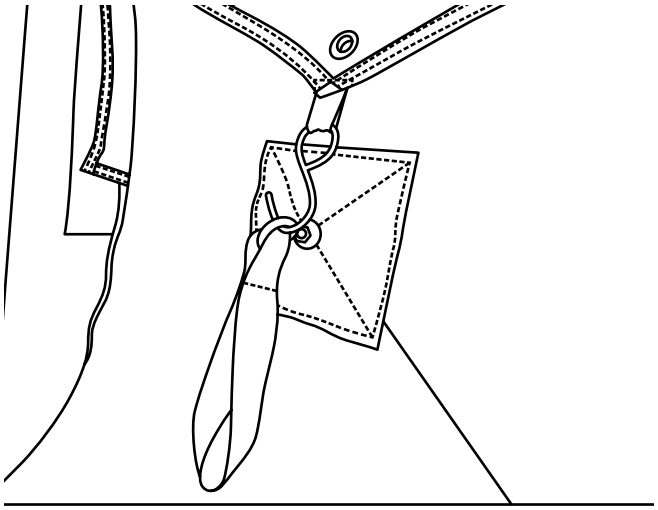

Remove rainfly from tent

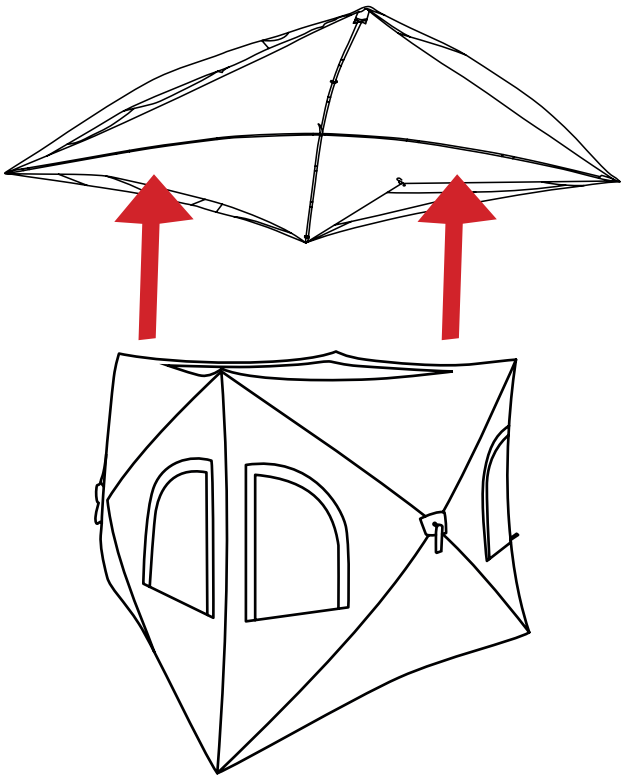

Remove the pole from the rainfly sleeves

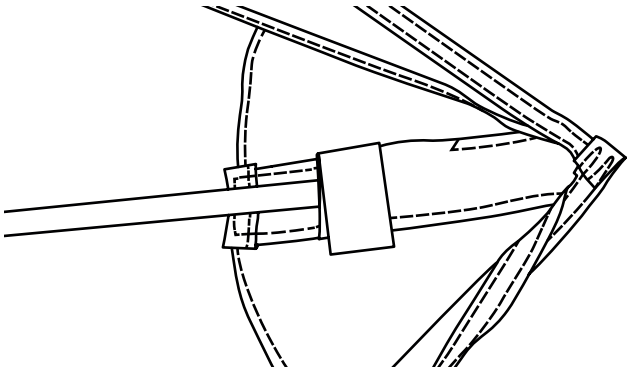

Remove all velcro patches from all poles

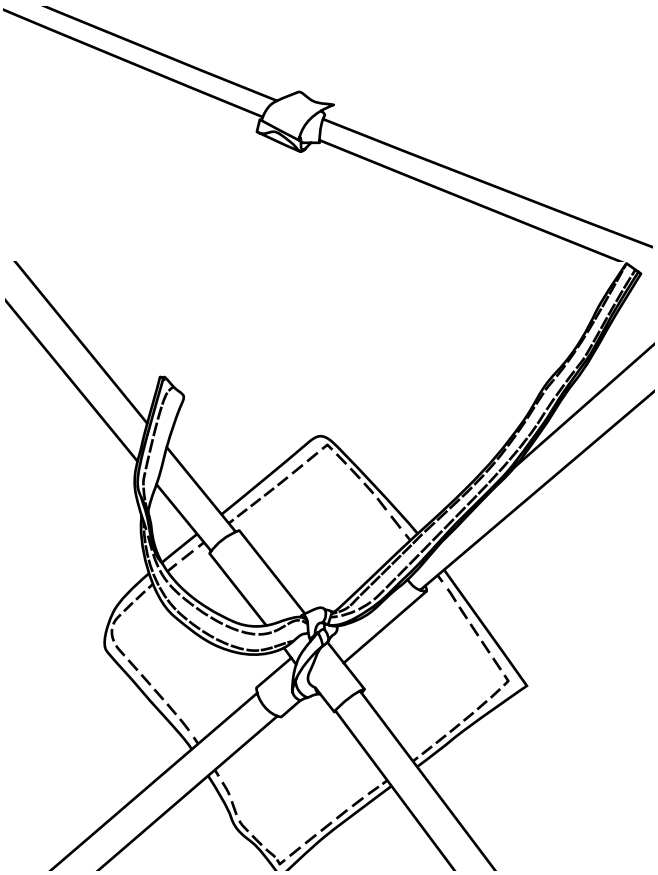

Untie the center cross tie

Fold the rainfly and collapse all poles to stow away

6

Use the Ceiling Pull Strap to pull down the ceiling of the tent.

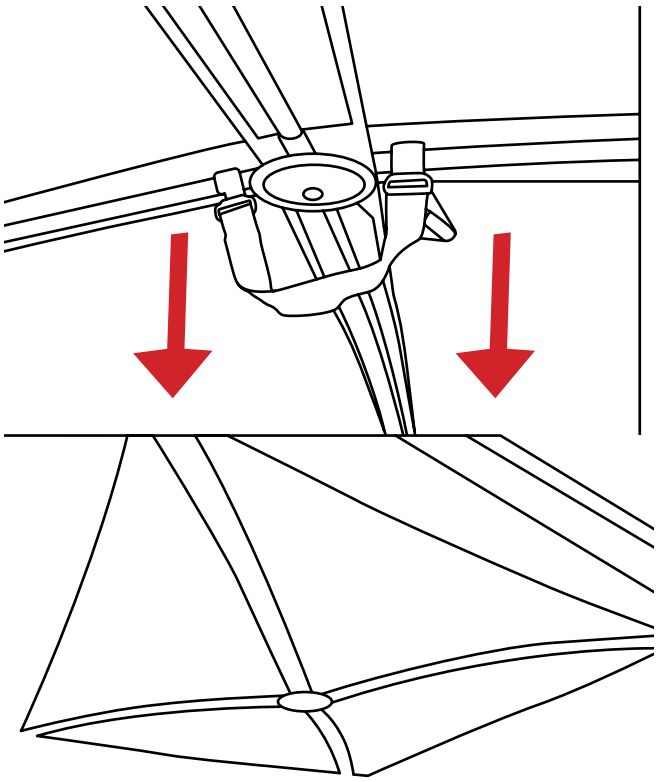

7

Push all center tabs inward on all 4 sides

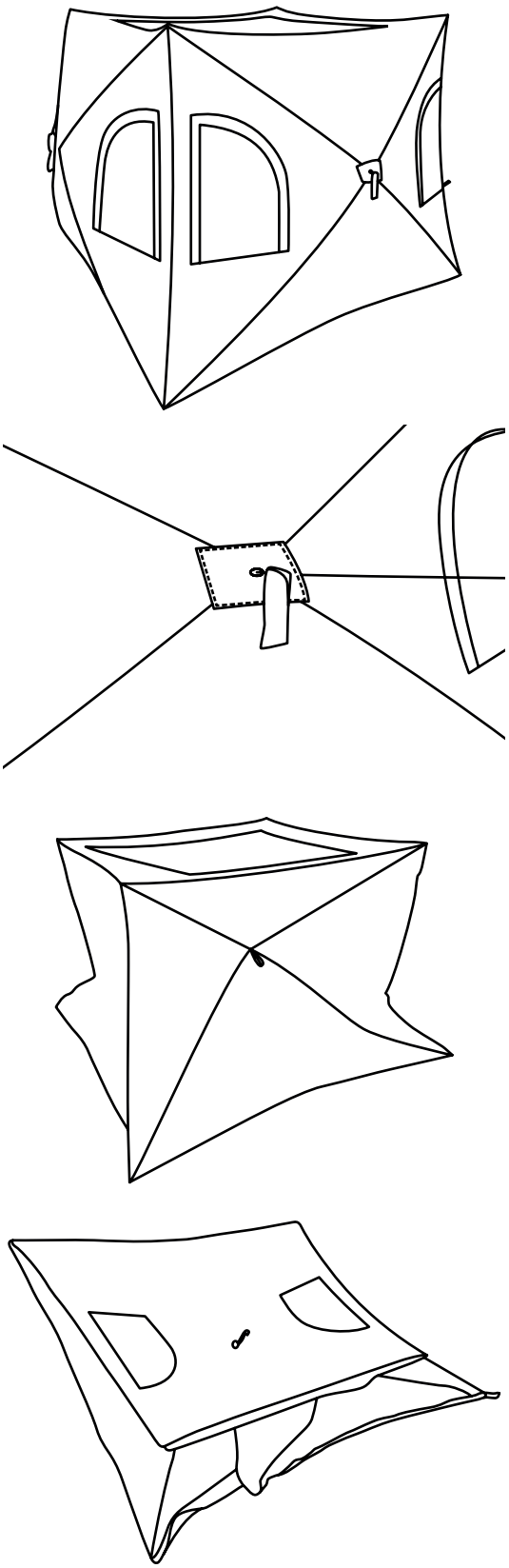

8

Put tent in collapsed position upward

Lay tent down and position on top of Storage Strap

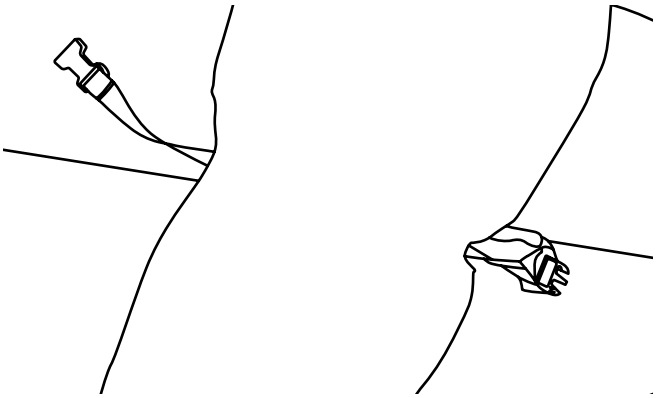

Buckle Strap

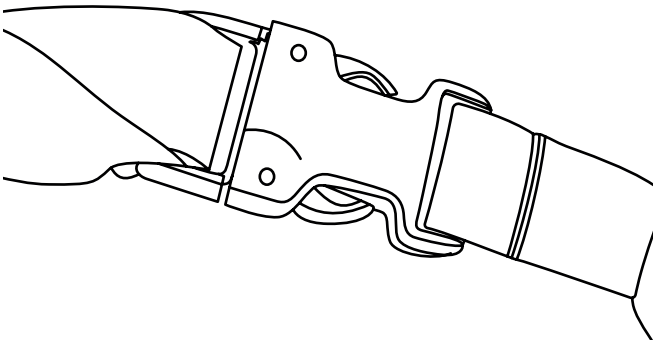

9

The New Added Padding

Older models of the Hub Centric may not have the neoprene padding with velcro.

If this circular padding is not already applied, attach to the internal push-out hub using the velcro patches and attach to the surrounding frame in order to prevent damage to any of the fabrics and PVC material internally.

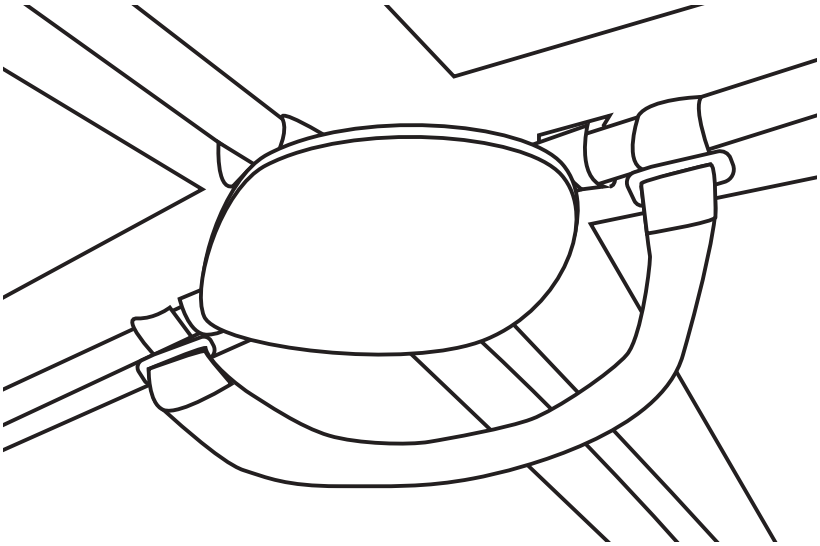

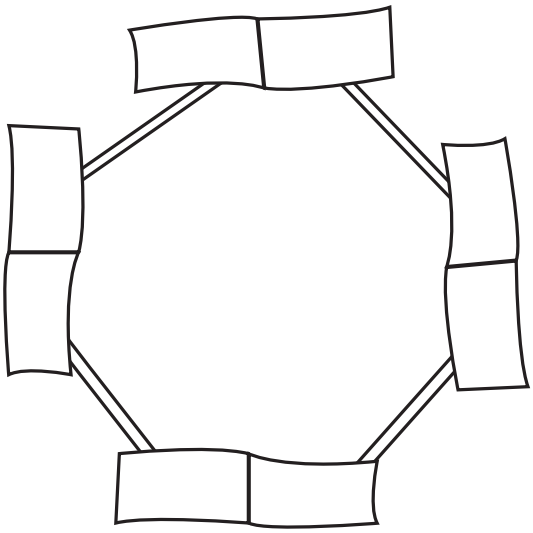

Click here to view video

Hub Centric Ground Tent Instructions

SET-UP & CARE INSTRUCTIONS

TIPS FOR A LONGER LASTING TENT

- **Open the floor slit and be able to sweep out any elements that may get in your tent**

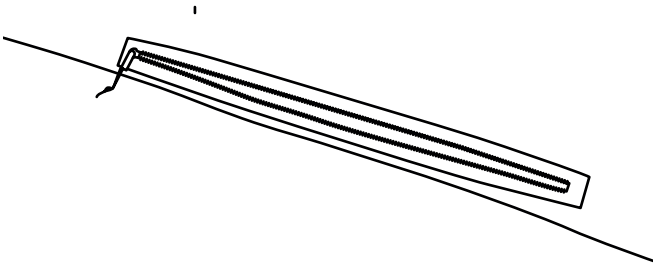

- **Use cold water and a sponge to wash any stains or dirt from your tent as to preserve the fabric**
- **Use the floor tarp to keep the bottom of your tent protected from any water or rocks that may scratch your tent**

⚠ WARNINGS

- **Weather Conditions – Do not set up your tent in high winds, severe storms, or areas prone to flash flooding. Always secure with stakes and guy lines.**
- **Fire Safety – Never use open flames, heaters, stoves, or candles inside or near the tent. Keep campfires at a safe distance.**
- **Ventilation – Always maintain proper airflow to reduce condensation and avoid buildup of harmful gases.**
- **Site Selection – Do not pitch your tent under dead tree limbs, on unstable ground, or in low-lying areas that may collect water.**
- **Anchoring – Ensure tent is properly staked and guy lines are tensioned before leaving unattended.**
- **Animals & Wildlife – Do not store food inside the tent. Use proper food storage to avoid attracting wildlife.**
- **UV & Heat Exposure – Extended sun exposure may degrade materials. Whenever possible, set up in shaded areas or use a tarp/awning for protection.**
- **Children & Pets – Supervise children and pets around the tent to prevent accidental damage or injury.**
- **Storage & Transport – Make sure the tent is completely dry before storage to prevent mold, mildew, and fabric damage.**

DO YOU NEED OUR HELP?

CUSTOMER SUPPORT 833-226-4863

SALES@OVERLANDVEHICLESYSTEMS.COM

WANT TO SHOW US YOUR RIG?
CHECK OUT OUR SOCIAL!

@overlandvehiclesystems