- Quality
- Value
- Service

Tech Reference

Hygienic Solutions at Work

Combination Hands Free Dispenser / Disposal Fixture

Code 410A-70: Stainless type 304, fully recessed, large capacity
Code 410B-70: Stainless type 304, semi recessed, large capacity
Code 410C-70: Stainless type 304, surface mounted, large capacity

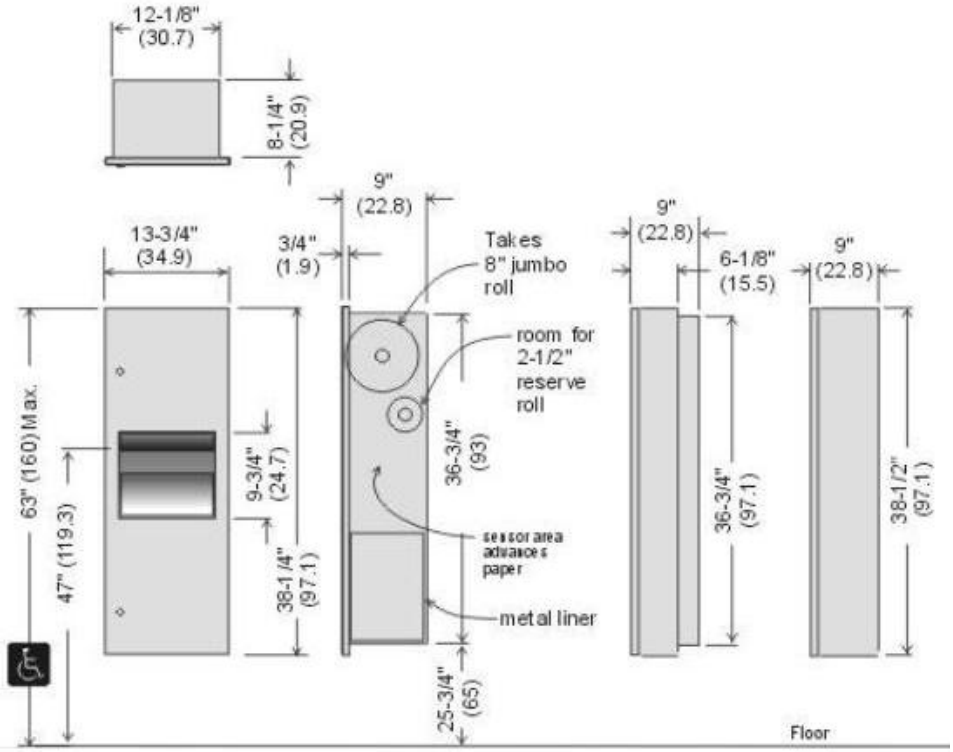

Specifications:

Site location: Extra deep combination fixture is ideal for high traffic areas.
Dispensing: towel dispenser will accept jumbo roll towels max. 8" diameter (2-1/2" reserve roll).
Features: Large detection zone senses hand when placed in a natural position under dispenser to deliver a 12" length of towel. Towel delivery is quiet and uniform. Hands free dispenser reduces paper flow, and provides maximum hygiene. Operates with 4 "D" size alkaline batteries or plug in AC adaptor. 4 alkaline batteries have be independently tested and found to provide 35,000 hand dries. Heavy duty 18 gauge stainless steel door (304, # 4 brushed finish). Secured with two tumbler keyed locks. All doors are hinged with full length stainless steel piano hinges. Corrosion resistant galvanized steel (20 ga.). Counterbalanced stainless steel door (20 ga.) provides maximum fire protection, mounted with full length piano hinge. Removable galvanized steel liner (26 ga.) with 18 litre capacity (4 gallons).
Installation: Provide 37-1/4" (94.6) high x 12-1/2" (31.7) wide x 8-1/2" (21.5) deep wall opening. Drill mounting holes as required. For unrestricted access bottom of rough opening to floor must not exceed 25-3/4" (65 cm), this will result in sensor being 47" (119.3 cm) or less from floor.

Description and specifications applicable on date issued. Frost reserves the right to make improvements or changes without notice.