Handy Washroom Direct
www.handywashroom.com

AMERICAN SPECIALTIES, INC.
441 Saw Mill River Road, Yonkers, NY 10701 (914) 476-9000
www.americanspecialties.com

MODEL No:	7403
ISSUED:	01-87
REVISED:	12-06

RECESSED MOUNTED EXTRA ROLL TOILET PAPER HOLDER

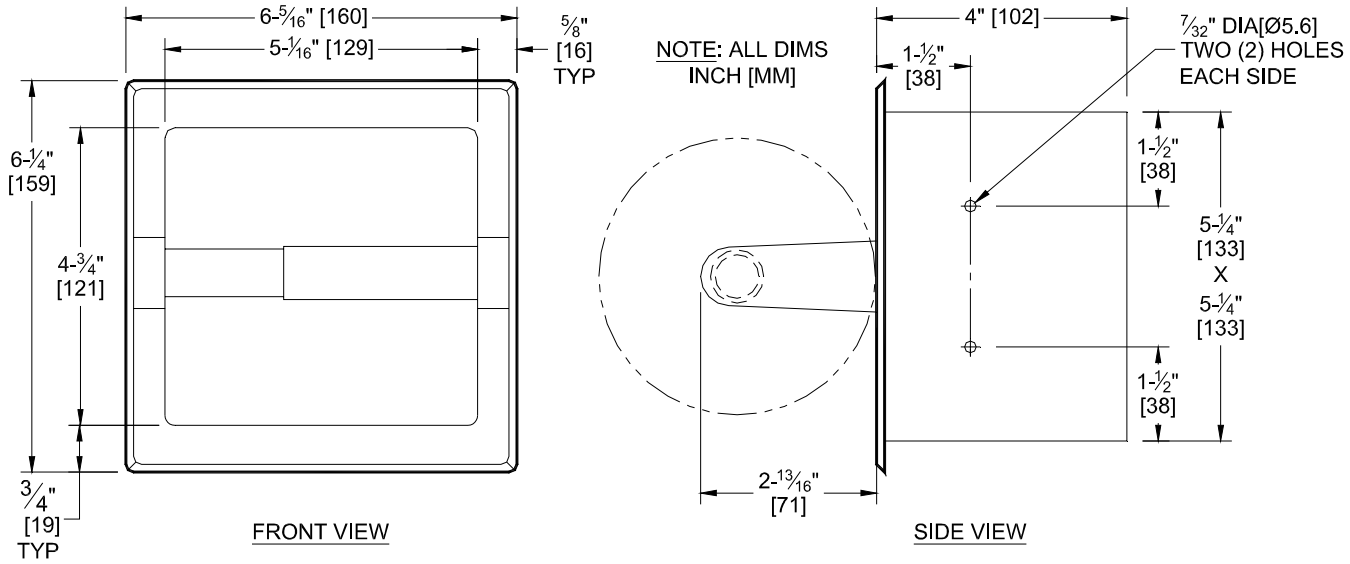

SPECIFICATION

Recessed Extra Roll Toilet Paper Holder shall hold two (2) rolls and dispense one (1) roll at a time of standard core roll toilet paper up to 5-1/8" (Ø130) diameter rolls. Unit shall have frame and recessed box fabricated of stainless steel type 304 alloy 18-8. Box shall hold one (1) extra toilet paper roll in reserve. Posts shall be rust proof Zamac. Roller shall be chrome plated high impact resistant ABS plastic and shall be spring-loaded. All exposed surfaces shall be satin or bright finish as chosen by option and indicated by code suffix.

Recessed Extra Roll Toilet Paper Holder shall be Model № 7403-B (or 7403-S) of American Specialties, Inc., 441 Saw Mill River Road, Yonkers, New York 10701-4913

INSTALLATION

Insert into RWO and mount unit in wall recess using № 10 stainless steel Philips flat or oval head self-tapping screws or wood screws (provided by others to suit wall conditions) of suitable length to penetrate blocking at sides of RWO by approximately 1/2" (13).

For compliance with ADA Accessibility Guidelines install unit with centerline of roller 19" (483) min AFF to 42" (1067) max AFF and 7" (178) min to 9" (229) max from front of commode to centerline of dispenser.

Rough Wall Opening (RWO) required is 5-1/2" W x 5-1/2" H x 4" D (140 x 140 x 102)

OPERATION

Spindle revolves freely. Reserve roll is protected from access until roll in-use is completely exhausted. Spring-loaded spindle holds roll until core is removed. Service staff replaces reserve roll on a cycle determined by maintenance needs.

THIS MANUFACTURER RESERVES THE RIGHT TO MAKE CHANGES IN DESIGN OR DIMENSIONS WITHOUT FORMAL NOTICE