

THE TOOLS YOU NEED TO BUILD

BETTER BASEBALL PLAYERS.

BP3®

BASEBALL PITCHING MACHINE WITH CHANGEUP

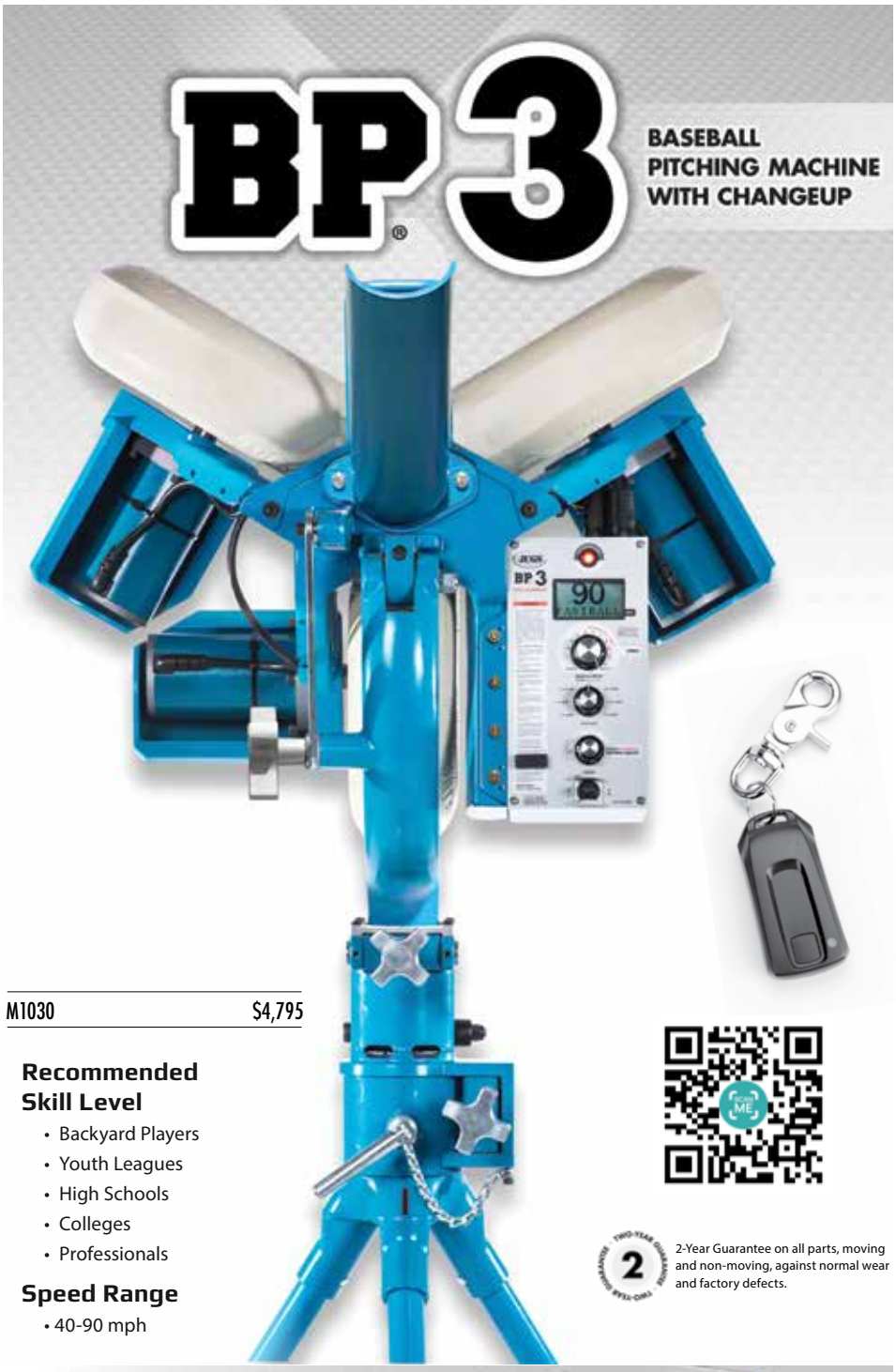

The JUGS BP3 Baseball Pitching Machine's changeup feature, higher speed range and the ability to effortlessly change from pitch to pitch, is designed for the advanced player whose skills demand practicing every pitch at game-like speeds.

M1030 $4,795

Recommended Skill Level

- Backyard Players
- Youth Leagues
- High Schools
- Colleges
- Professionals

Speed Range

- 40-90 mph

2-Year Guarantee on all parts, moving and non-moving, against normal wear and factory defects.



Change speeds without the hitter knowing it!

Switch between fastballs and changeups with the touch of a button using the hand-held remote control. Remote control can be used at the machine or even behind the hitter.

Carousel Feeder



OPTIONAL 36-Baseball Carousel Ball Feeder: See Page 10 for more details.

"While in college, we'd use the BP3 for any late-night cage session—set up for any pitcher we wanted to see; simulate the starting pitcher for the next day. I always felt like we were ready to go when we stepped in the box."



Adley Rutschman—

- Professional Baseball Player
- 1st Player Chosen in the 2019 MLB Amateur Draft
- Member of the 2023 AL All-Star Team

JUGS SPORTS

0% APR financing—Ask about our NEW Payment Plan • Call: 1-800-547-6843

The following features and benefits make the BP3 a must for any serious program.

A) **Patented Grip-Tite® 12" non-marking pneumatic tires**—Average 20-year life expectancy compared to 5-year solid-tire life expectancy.

Grip-Tite® tires provide superior pitch accuracy compared to any other 3-wheel machine. Grip-Tite® tires will not melt, crack or chunk like solid tires.

B) **3 wheels provide better contact with the ball for exceptional pitch control and accuracy.**

C) **3 wheel design eliminates the need to rotate the machine to change pitches.**

D) **Always-see-the-ball™ delivery system:** the black "hitter's eye" ball chute gives your hitters an unobstructed view from machine to hitting zone..

E) **Throws Changeups:** change from fastball to changeup at the touch of a button using the remote control on key chain or manual button located on control panel.

F) **Large 3" LCD Readout Display**

G) **Digital Speed Adjustment:** 40-90 mph.

H) **Select-A-Pitch™ Dial:** The BP®3 throws the following nine pitches at the turn of a dial.

- **Fastballs and Changeups**
- **Right- and Left-handed Curveballs and Sliders**
- **Right- and Left-handed Cutters**
- **Split-finger Fastballs**

I) **Fastball/Changeup Hitting Circuit:** 3 preset hitting circuits allows the machine to automatically change between fastball and changeup giving your hitters a "real" pitcher vs. hitter experience.

J) **Micro-Adjustment:** Pinpoint™ control at your fingertips—the most advanced and easy to use pitch targeting system ever developed for a pitching machine (patent pending.)

K) **Vertical and Horizontal Macro Adjustment Levers:** Throwing deep 325' fly balls or towering pop-ups has never been easier. 360 degree rotation allows you to easily practice using the entire field.

L) **Quick-Snap® leg attachment**—No T-handle or leg clamp necessary.

M) **Easy to move and set up**—Simply lock machine in the "pop-up" position, lower to the ground and wheel your machine like a wheel barrow.

N) **Three ¼ HP motors** will give you years of trouble-free use.

O) **Three cast-aluminum motor guards** protect motors from direct hits.

P) **Cast aluminum and steel construction**—weighs 140 lbs.

Q) Throws baseballs, JUGS Pearl®, JUGS Youth League Pearl®, Sting-Free® baseballs, Maximum Velocity Sting-Free® baseballs, Lite-Flite® baseballs, Softie® baseballs and Bulldog™ polyballs.

R) Runs on 110-volt AC or the Bluetti AC70 Portable Power Station.

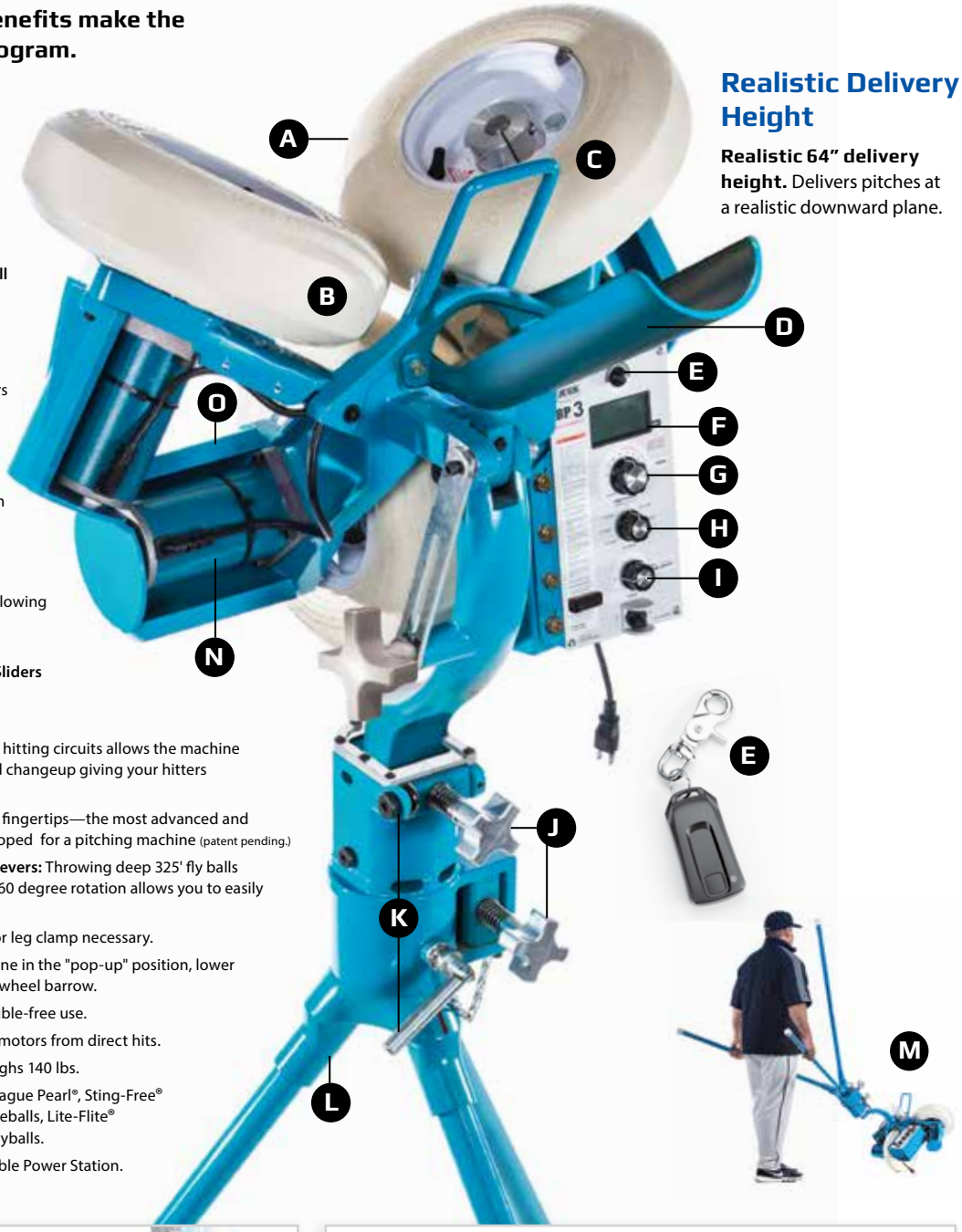

Realistic Delivery Height

Realistic 64" delivery height. Delivers pitches at a realistic downward plane.

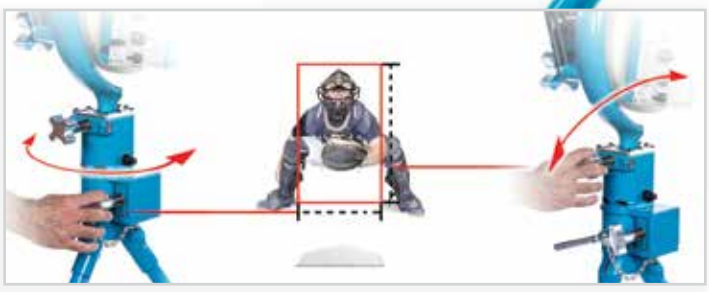

Pinpoint™ Micro Adjustment at your fingertips

The most advanced and easy to use pitch targeting system ever developed (patent pending.) Locate pitches instantly—right to left, up or down with a quick turn of your wrist.



Optional Fungo Height Short Legs

Perfect for all defensive drills, grounders and deep fly balls. The perfect addition to the BP3.



Defensive Short Legs (3)

50061	$79

- Fungo Level delivery height

mini3® BASEBALL MACHINE



The easy answer to all your practice needs

M1040	$3,195

2-Year Guarantee on all parts, moving and non-moving, against normal wear and factory defects.

Recommended Skill Level

- Backyard Players
- Youth Leagues
- High Schools
- Colleges
- Professionals

Speed Range

- 30–80 mph



From youth leagues to the Big Leagues—the mini3 is the machine for you.

Balance and vision are key to hitting.

Always-See-The-Ball™ delivery system—the black "hitter's eye" ball chute gives your hitters an unobstructed view from machine to hitting zone.



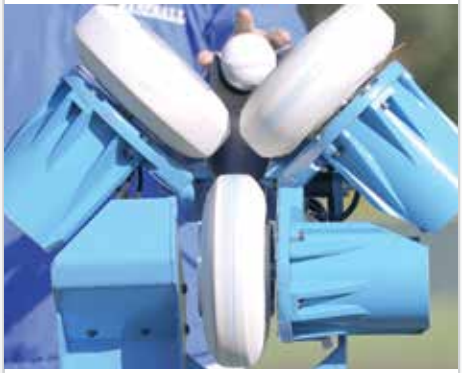

Why JUGS mini3?

- Pinpoint accuracy and control.
- 30-80 mph speed range.
- At just 95 lbs. the mini3 is designed for the coach or player on the go—



Carousel Feeder

OPTIONAL 36-Baseball Carousel Ball Feeder: See Page 10 for more details.

JUGS SPORTS 0% APR financing—Ask about our NEW Payment Plan • Call: 1-800-547-6843



The pre-set pitches on the Select-A-Pitch™ feature make the mini3 safe, consistent and accurate, even your young hitters can feel confident and comfortable getting a good pitch to hit.

PERFECT FOR DEFENSIVE DRILLS





Defensive Short Legs (3)

Perfect for all defensive drills, grounders and deep fly balls. The perfect addition to the mini3.

50061 $79

• Fungo Level delivery height

mini3™ Features and Benefits:

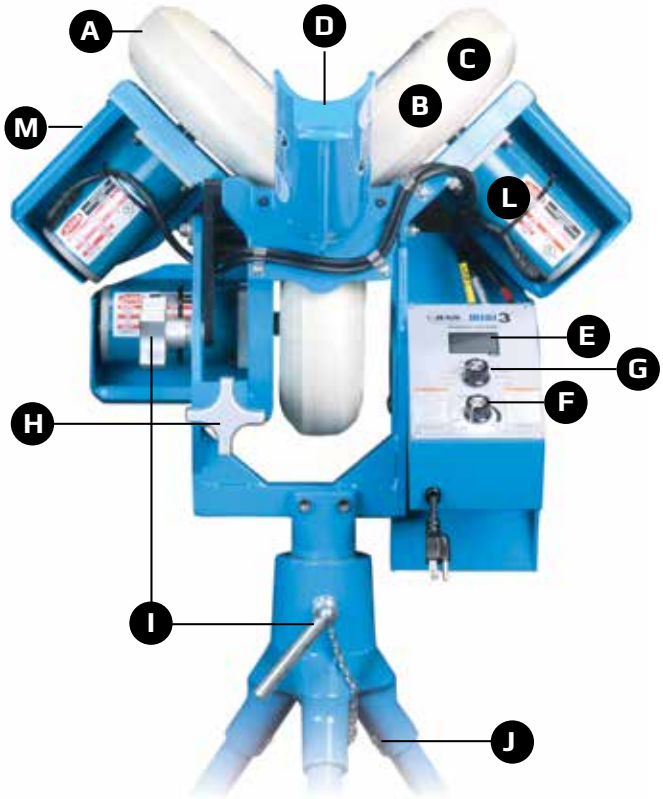

A) **Patented Grip-Tite® 9" non-marking pneumatic tires**—Average 20-year life expectancy compared to 5-year solid-tire life expectancy.

Grip-Tite® tires provide superior pitch accuracy compared to any other 3-wheel machine. Grip-Tite® tires will not melt, crack or chunk like solid tires.

B) **3 wheels provide better contact with the ball for exceptional pitch control and accuracy.**

C) **3 wheel design eliminates the need to rotate the machine to change pitches.**

D) **Always-see-the-ball™ delivery system:** the black "hitter's eye" ball chute gives your hitters an unobstructed view from machine to hitting zone.

E) **LCD Readout Display**

F) **Digital Speed Adjustment:** 30-80 mph.

G) **Select-A-Pitch™ Dial:** The mini3™ throws the following eight pitches at the turn of a dial.

- **Fastballs**
- **Right- and Left-handed Curveballs and Sliders**
- **Right- and Left-handed Cutters**
- **Split-finger Fastballs**

H) **Vertical Micro-Adjustment:** Pinpoint™ control at your fingertips—the most advanced and easy to use pitch targeting system ever developed for a pitching machine (patent pending.)

I) **Vertical and Horizontal Macro Adjustment Levers:** Throwing deep 325' fly balls or towering pop-ups has never been easier. 360 degree rotation allows you to easily practice using the entire field.

J) **Quick-Snap® leg attachment**—No T-handle or leg clamp necessary.

K) **Easy to move and set up**—Simply lock machine in the "pop-up" position, lower to the ground and wheel your machine like a wheel barrow.

L) **Three ¼ HP motors** will give you years of trouble-free use.

M) **Three cast-aluminum motor guards** protect motors from direct hits.

N) **Cast aluminum and steel construction**—weighs 95 lbs.

O) Throws baseballs, JUGS Pearl®, JUGS Youth League Pearl®, Sting-Free® baseballs, Maximum Velocity Sting-Free® baseballs, Lite-Flite® baseballs, Softie® baseballs and Bulldog™ polyballs.

P) Runs on 110-volt AC or the Bluetti AC70 Portable Power Station.



M1031 $3,995

Recommended Skill Level

- Backyard Players
- Youth Leagues
- High Schools
- Colleges
- Professionals

Speed Range

- 40-90 mph

The key to hitting is getting a good pitch to hit.

2-Year Guarantee on all parts, moving and non-moving, against normal wear and factory defects.



A Multi-Station, All-Purpose machine

The JUGS SP3 Baseball Pitching Machine's targeting system takes your batting practice to the next level. Change from high and inside to low and outside with a couple turns of the vertical and horizontal micro-adjustment knobs.



Why JUGS SP3?

- Pinpoint accuracy and control.
- 40-90 mph speed range.
- 8 pitches at the turn of a dial—Fastballs, Split-Finger Fastballs, Right and Left-Handed Curves, Sliders and Cutters.

Carousel Feeder



OPTIONAL 36-Baseball Carousel Ball Feeder: See Page 10 for more details.

JUGS SPORTS **0% APR financing—Ask about our NEW Payment Plan • Call: 1-800-547-6843**

Black to Black accuracy at the turn of a dial and twist of a knob.



Realistic Delivery Height

Realistic 64" delivery height. Delivers pitches at a realistic downward plane.





Defensive Short Legs (3)

Perfect for all defensive drills, grounders and deep fly balls. The perfect addition to the SP3.

50061 $79

• Fungo Level delivery height

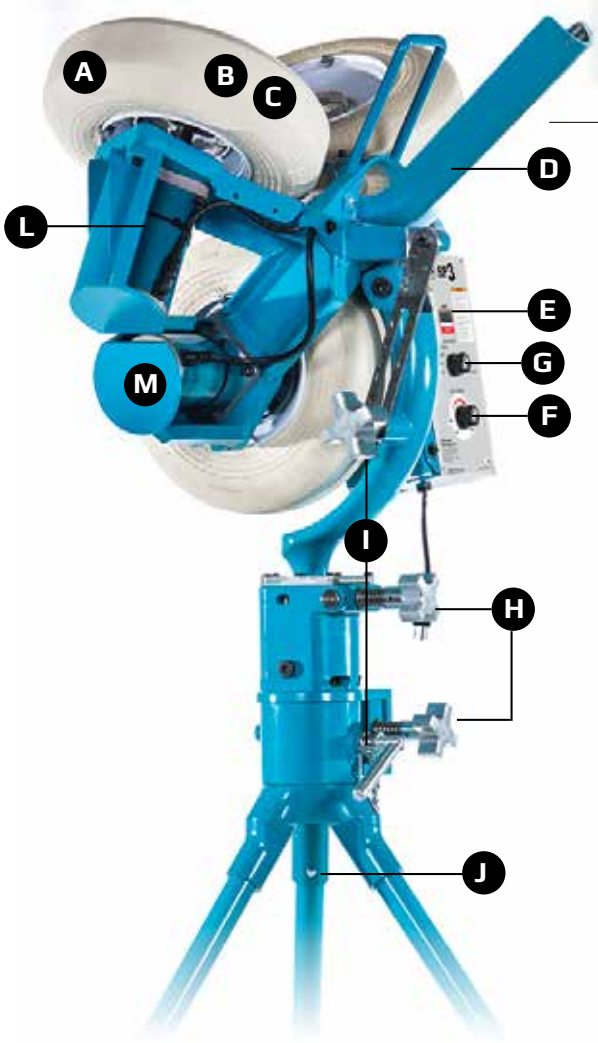

SP3 Features and benefits:

A) Patented Grip-Tite® 12" non-marking pneumatic tires—Average 20-year life expectancy compared to 5-year solid-tire life expectancy.
Grip-Tite® tires provide superior pitch accuracy compared to any other 3-wheel machine. Grip-Tite® tires will not melt, crack or chunk like solid tires.

B) 3 wheels provide better contact with the ball for exceptional pitch control and accuracy.

C) 3 wheel design eliminates the need to rotate the machine to change pitches.

D) Always-see-the-ball™ delivery system: the black "hitter's eye" ball chute gives your hitters an unobstructed view from machine to hitting zone..

E) LCD Readout Display

F) Digital Speed Adjustment: 40-90 mph.

G) Select-A-Pitch™ Dial: The SP3 throws the following eight pitches at the turn of a dial.
- **Fastballs**
- **Right- and Left-handed Curveballs and Sliders**
- **Right- and Left-handed Cutters**
- **Split-finger Fastballs**

H) Micro-Adjustment: Pinpoint™ control at your fingertips—the most advanced and easy to use pitch targeting system ever developed for a pitching machine (patent pending.)

I) Vertical and Horizontal Macro Adjustment Levers: Throwing deep 325' fly balls or towering pop-ups has never been easier. 360 degree rotation allows you to easily practice using the entire field.

J) Quick-Snap® leg attachment—No T-handle or leg clamp necessary.

K) Easy to move and set up—Simply lock machine in the "pop-up" position, lower to the ground and wheel your machine like a wheel barrow.

L) Three ¼ HP motors will give you years of trouble-free use.

M) Three cast-aluminum motor guards protect motors from direct hits.

N) Cast aluminum and steel construction—weighs 140 lbs.

O) Throws baseballs, JUGS Pearl®, JUGS Youth League Pearl®, Sting-Free® baseballs, Maximum Velocity Sting-Free® baseballs, Lite-Flite® baseballs, Softie® baseballs and Bulldog™ polyballs.

P) Runs on 110-volt AC or the Bluetti AC70 Portable Power Station.

WHICH MACHINE BEST FITS YOUR NEEDS?

JUGS has a machine for every age and skill level.

BP®2 Baseball Pitching Machine

- Recommended Skill Level—High School, College and Professionals.
- 2-wheel machine with 6 Preset Pitch Positions.
- The BP2 allows you to set the digital speed you desire by simply turning a knob. The BP2 has a 45-90 mph range.

2-Year Guarantee

M1020 $3,395



PRODUCT DETAILS

Speed Range	45–90 mph
Speed Adjustment	Digital Speed Readout
Pinpoint™ Micro Adjustment	Yes
Select-A-Pitch™	Yes
Realistic 64 " Delivery Height	Yes
Patented 12" Grip-Tite® Tires	Yes
Weight	125 lbs.
360-Degree Swivel for Defensive Drills	No

MVP® Combo Pitching Machine

- Recommended Skill Level—Pitching Machine Leagues and Youth Leagues.
- Throws both baseballs and softballs up to 60 mph.



2-Year Guarantee

M1601 $1,595

PRODUCT DETAILS

Speed Range	15–60 mph
Speed Adjustment	Digital Speed Readout
Throws Baseballs and Softballs	Yes
Realistic Delivery Height for Baseball or Softball	Yes
16" Pneumatic Tire	Yes
Weight	56 lbs.
360-Degree Swivel for Defensive Drills	No

PS50™ Pitching Machine for Baseball and Softball

- Recommended Skill Level—Backyard Players and Youth Leagues.
- Throws both baseballs and softballs up to 50 mph.



1-Year Guarantee

M1150 $995

PRODUCT DETAILS

Speed Range	15–50 mph
Speed Adjustment	Digital Speed Readout
Throws Baseballs and Softballs	Yes
Realistic Delivery Height for Baseball or Softball	Yes
9" Pneumatic Tire	Yes
Weight	50 lbs.
360-Degree Swivel for Defensive Drills	No
Optional PS50 Battery Pack (See page 11)	Yes

Lite-Flite® Machine for Baseball and Softball

- Recommended Skill Level—Backyard Players, Youth Leagues, High Schools and Colleges.



2-Year Guarantee

M6000 $529

PRODUCT DETAILS

Simulated Speeds (@ 25 feet)	15–85 mph
Speed Adjustment	Single-Dial Setting
Pitch Selection	Select-A-Pitch™
Throws Lite-Flite® and Poly Baseballs and Softballs	Yes
Throws Regular Baseballs and Softballs	No
Realistic Delivery Height for Baseball or Softball	Yes
Weight	35 lbs.
360-Degree Swivel for Defensive Drills	Yes
Optional Lite-Flite/Small-Ball Battery Pack (See page 11)	Yes

JUGS SPORTS 0% APR financing—Ask about our NEW Payment Plan • Call: 1-800-547-6843



FOR MORE INFORMATION OR FOR VIDEOS FEATURING JUGS PITCHING MACHINES, PLEASE LOG ONTO jugssports.com

BP®1 Baseball Only Pitching Machine

- Recommended Skill Level—Pitching Machine Leagues, Youth Leagues, High Schools and Colleges.
- 1-wheel machine that throws baseballs up to 70 mph.



2-Year Guarantee

M1401 $1,945

PRODUCT DETAILS

Speed Range	15–70 mph
Speed Adjustment	Digital Speed Readout
Throws Baseballs	Yes
Realistic Delivery Height for Baseball	Yes
16" Pneumatic Tire	Yes
Weight	75 lbs.
360-Degree Swivel for Defensive Drills	Yes



BP®1 Combo Pitching Machine

- Recommended Skill Level—Pitching Machine Leagues, Youth Leagues, High Schools and Colleges.
- 1-wheel machine that throws both baseballs and softballs up to 70 mph.



2-Year Guarantee

M1501 $1,995

PRODUCT DETAILS

Speed Range	15–70 mph
Speed Adjustment	Digital Speed Readout
Throws both Baseballs and Softballs	Yes
Realistic Delivery Height for Baseball or Softball	Yes
16" Pneumatic Tire	Yes
Weight	75 lbs.
360-Degree Swivel for Defensive Drills	Yes

Small-Ball® Pitching Machine

- Recommended Skill Level—Pitching Machine Leagues, Youth Leagues, High Schools and Colleges.
- Throws the JUGS polyurethane-foam 5-inch/½-oz. SMALL-BALL®.



1-Year Guarantee

M7000 $395

PRODUCT DETAILS

Simulated Speeds	Up to 75 mph
Speed Adjustment	Single-Dial Setting
Types of Pitches Thrown	Fastball and Overhand Curveball
Realistic Delivery Height for Baseball or Softball	Yes
Manual and Auto Feed	Yes
Weight	23 lbs.
360-Degree Swivel for Defensive Drills	No
Optional Lite-Flite/Small-Ball Battery Pack (See page 11)	Yes

Combination Pitching Machine for Baseball and Softball

- Recommended Skill Level—High Schools, Colleges and Professionals.
- 2-wheel machine that throws both baseballs and softballs up to 104 mph.



2-Year Guarantee

M1300 $4,595

PRODUCT DETAILS

Speed Range	20–104 mph
Speed Adjustment	Dual Dial Settings
Throws both Baseballs and Softballs	Yes
Realistic Delivery Height for Baseball or Softball	Yes
16" Pneumatic Tires	Yes
Weight	127 lbs.
360-Degree Swivel for Defensive Drills	Yes

Toss® Machine

- Recommended Skill Level—Backyard Players, Youth Leagues, High Schools, Colleges and Pros.



2-Year Guarantee

A0600 $299

PRODUCT DETAILS

Speed Adjustment	Automatic toss every 5 seconds
Rechargeable	Yes
Runs up to 8 hours on a charge	Yes
Holds 14 Baseballs or 10 Softballs	Yes
Tosses Baseballs and Softballs	Yes
Weight	13 lbs.

CAROUSEL FEEDER

Hitting on your own has never been easier



- **NOW INCLUDED—**
  In-Line Feeder Remote Switch.
- Releases a ball every 6 seconds.
- Heavy-duty steel and Lexan construction.
- Holds 36 baseballs or 18 softballs.
- Can be used with any regulation size and weight baseball or softball.
- Easy to set up.
- Runs on 110V AC.









36-Baseball Carousel Feeder:

F1050	BP®1 Baseball Only, Changeup Baseball, PS50, Jr Baseball, MVP Baseball.	$795
F1060	BP®2 Baseball	$795
F1065	BP®3 and SP3™ Baseball	$795
F1080	mini3™ Baseball	$795

36-Baseball, 18-Softball Combo Carousel Feeder:

F1055	BP1 Combo, MVP Combo, Jr Baseball/Softball	$835



In-Line Feeder Remote Switch

Works on all JUGS Feeders.

F3000		$185



Lite-Flite Machine Automatic Ball Feeder

- Portable and lightweight.
- Simple to set up and operate.
- Delivers a ball every 6 seconds.
- Made of durable lightweight steel.

F1025	18-Ball Lite-Flite® Baseball Feeder	$495

IMPORTANT: A protective screen must be used to protect machine and feeder from batted balls.

- See pages 20-21 for our full line of protective screens.

IMPORTANT: For Optimal performance and reliability use only 11- or 12-inch (circumference) regulation weight JUGS Practice Softballs with seams, LeatherLast™, Softie®, or Dimpled Style Softballs. With the baseball feeder, use only 9-inch (circumference) regulation JUGS Practice Baseballs with seams, Pearls®, Softie®, or Dimpled Style. **DO NOT use any other type of ball in the feeder.**

JUGS SPORTS 0% APR financing—Ask about our NEW Payment Plan • Call: 1-800-547-6843

Practice Accessories

Buckets and Ball Holders:

Back-Saver™ Ball Basket

- A collapsible ball basket—great for holding balls during practice.
- Holds up to 100 baseballs
- Light-weight and durable.



A1021 $119

Bucket Plus

Bucket and balls not included.

- A portable stand used to elevate your bucket of balls. Saves you the constant bending over.
- Easy to use—just place your bucket of balls in it and you're ready to go.



A1030 $99

Rutsch Bucket with Lid

- No spilled balls in your trunk or back seat.
- Holds 60 baseballs.
- Makes a great coaching sea



A2030 $27

Portable Power Supplies: Operate your machine away from 110V AC power using one of JUGS Portable Power Supplies.

- Use your JUGS Machine any time, any place with the Bluetti AC70 Portable Power Station.
  Hours of quiet, uninterrupted use. Lightweight and easy to transport with grip-and-go handle
- Why the Bluetti Portable Power Station?
  —Charge Time: 2 Hours.
  —Dimensions: 12.4" x 8.2" x 10.1"
  —AC Output: 2 x 120V (1000W total).
  —Weight: 23.6 lbs.
- The Rechargeable Battery Pack is the perfect addition to both the Lite-Flite® and Small-Ball® machines.



Bluetti AC70 Portable Power Station

A2002 $499



Rechargeable Battery Pack

A0050 $370



Pitching Machine Cover:

This heavy-duty vinyl cover protects your JUGS Pitching Machine from the elements. Fits all machines.

A0015 $149

Protector Series Wheel Kit:

- JUGS Protector Series Wheel Kit enables one person to easily move protector series screens by themselves.
- **Quickly attaches to any BLACK Protector Series Screen.**
- To engage wheel kit, simply lift screen directly above the wheel kit and kick the wheels under the screen—it's that simple.
- The perfect addition to our hitting facility tough Protector Series Screens.





A0720 $199

Small-Ball® Options:



Hitting Stick™ Package

A1000 $60



Hitting Stick™

A1010 $30

For more information on any JUGS product, log onto jugssports.com

JUGS Hitting Packages

All JUGS Packages reflect a 10% Savings

Adley Rutschman Baseball Backyard Package™



Package Includes:

1. mini3™ Baseball Pitching Machine
2. 65'L x 11'W x 11'H Batting Cage Net #7, #27 Polyethylene
   - Required Assembly Space: (69'L x 15'W x 11'H)
3. Frame for 65'L x 11'W x 11'H Batting Cage #7
4. Protector® Blue Series L-Shaped Screen
5. FREE Backdrop & Pitcher's Trainer
6. (2) Dozen Pearl® Baseballs

A0001	$5,854.50









SAVE OVER $585 WHEN PURCHASED TOGETHER

JUGS SPORTS 0% APR financing—Ask about our NEW Payment Plan • Call: 1-800-547-6843

The road to the Big Leagues starts in your backyard.





Baseball Backyard Net Package

Package Includes:

1. 65'L x 11'W x 11'H Batting Cage™ Net, #27 Polyethylene
   - Required Assembly Space: (69'L X 15'W X 11'H)
2. Outdoor Frame for 65'L x 11'W x 11'H Cage
3. Standard L-Shaped Screen
4. FREE Backdrop & Pitcher's Trainer

A0005 $2,412.90





Short-Toss® Package

Package Includes:

1. Short-Toss Cage® (35'L x 12'W x 12'H)
2. PS50 Baseball and Softball Pitching Machine
3. Protector™ Blue Series Short-Toss® Screen
4. (4) Dozen JUGS Pearl® Baseballs with Rutch Bucket
5. Throw-Down Home Plate





A0016 $3,217.46

JUGS Hitting Packages

All JUGS Packages reflect a 10% Savings



JUGS® T Hitting Station

Package Includes:

1. JUGS T
2. JUGS® Short T
3. Complete Practice Travel Screen®
4. 1-Dozen Pearl® Baseballs
5. Throw-Down Home Plate

A0086 Baseball	$462.47



5-Point Hitting Tee™ Package

Package Includes:

1. Complete Practice Travel Screen®
2. 5-Point Hitting Tee™
3. 2-Dozen Sting-Free® Baseballs

A0110 Baseball	$382.46



Practice Package™

Package Includes:

1. Complete Practice Travel Screen®
2. HIT LIKE A PRO Hitting Tee™
3. 2-Dozen Sting-Free® Baseballs

A0100 Baseball	$328.46



Toss Package™

Package Includes:

1. Complete Practice Travel Screen®
2. Toss™ Machine
3. Throw-down Home Plate
4. Toss™ Machine Drill Book
5. 2-Dozen Sting-Free® Baseballs

A0150 Baseball	$543.60

JUGS SPORTS **0% APR financing—Ask about our NEW Payment Plan • Call: 1-800-547-6843**

Hitting Tee Collection

Purchase 5 or more tees and Save 15%

OFFER DOES NOT INCLUDE RUBBER TEES

JUGS T

- Always-feel-the-ball flexible top. Feel the ball on contact, not the tee.
- No outside weight needed. Will not tip over.
- Rubber encased 14"x 11", ¼"-thick steel base adds stability.
- Patented internal interlocking bolt design prevents slippage of the upper tee stem.
- Great for high- and low-tee drills



A0415 $119.95

PRODUCT DETAILS

Height Range	24–46 inches
Grip-N-Go™ Handle	Yes
Weight	10.5 lbs.
1-Year Guarantee	Yes

JUGS QUICK RELEASE T

FOR THE COACH OR PLAYER ON THE GO!

- Features Quick Release Base—from bag to field in seconds
- Always-feel-the-ball flexible top. Feel the ball on contact, not the tee.
- No outside weight needed.
- Rubber encased 14"x 11", ¼"-thick steel base.





A0425 $134.95

PRODUCT DETAILS

Height Range	25–46 inches
Grip-N-Go™ Handle	Yes
Weight	11.5 lbs.
1-Year Guarantee	Yes

JUGS Short T

- Always-feel-the-ball flexible top. Feel the ball on contact, not the tee.
- No outside weight needed. Will not tip over.
- Rubber encased 14"x 11", ¼"-thick steel base adds stability.
- Patented internal interlocking bolt design prevents slippage of the upper tee stem.
- Work on the pitches at the bottom of the strike zone. **Learn to hit the pitcher's pitch.**



A0416 $104.95

PRODUCT DETAILS

Height Range	16–23 inches
Grip-N-Go™ Handle	Yes
Weight	9.5 lbs.
1-Year Guarantee	Yes

Pro-Style 5-Point T

For complete plate coverage—

- Rubber encased ¼"-thick steel base adds stability.
- Teaches correct contact points for inside, middle, and outside pitches.



A0420 $239.95

PRODUCT DETAILS

Height Range	24–46 inches
Grip-N-Go™ Handle	Yes
Weight	20 lbs.
1-Year Guarantee	Yes

JUGS Combo T Package

1. Regular JUGS T stem: 24"– 46"
2. SHORT T stem: 16"– 23"
3. One T base.

For complete plate coverage— Purchase 2 stems and 1 base.



A0417 $177.95

PRODUCT DETAILS

Height Range	16–23 and 24-46 Inches
Grip-N-Go™ Handle	Yes
Weight	11.5 lbs.
1-Year Guarantee	Yes

5-Point Hitting Tee™

- **Hit the ball where it's pitched!™** Teaches correct contact points for inside, middle, and outside pitches.
- Develops hand-eye coordination and a quick bat.
- Teaches the hitter to use the whole field.
- Ribbed upper tee tubes will prevent your tee tubes from slipping during practice.
- Patented crisscross 5-point design.



A0410 $119.95

PRODUCT DETAILS

Height Range	21–35 inches
Grip-N-Go™ Handle	Yes
Weight	17 lbs.
1-Year Guarantee	Yes

A0400 $59.95

PRODUCT DETAILS

Height Range	21–35 inches
Grip-N-Go™ Handle	Yes
Weight	10.5 lbs.
1-Year Guarantee	Yes



Hit Like a Pro Hitting Tee™

- 2D Barcode located on base of tee links to video, highlighting the proper way to use the tee for both right- and left-handed hitters and a number of tee drills as well.
- Ribbed upper tee tube will prevent your tee tube from slipping during practice.
- Durable solid-rubber base. Disassembles for easy storage.
- Fully adjustable extension tube.



All JUGS Batting Tees come with a 1-Year Guarantee.

Low Cost, High Quality Batting Cage Netting for Baseball



In the last four decades we have sold over 140,000 Batting Cage Nets—making us easily the #1-selling batting cage net company in the world.



What grade of batting cage net best fits your needs?

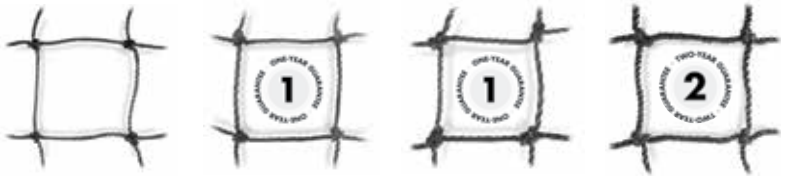

#27 Polyethylene
- Backyards

#42 Polyethylene
- Backyards
- Youth Leagues

#60 Polyethylene
- Backyards
- Youth Leagues
- High Schools
- Colleges

#96 Polyethylene
- High Schools
- Hitting Facilities
- Colleges
- Professionals

Custom Netting: All applications, all sizes, all the time.

JUGS Sports not only offers custom netting for baseball and softball, but for many other applications as well. Any dimension, all mesh and fiber sizes, and all strengths are available to fit your specific needs.

Twisted Knotted Black Polyethylene #27, #42 , #60 and #96 Batting Cage Netting Features and Benefits:

- Twisted Knotted Black Polyethylene Nets are hung on the square and are designed specifically for baseball and softball use.
- All JUGS nets come with a JUGS Hitter's Door for easy in-and-out access.
- Knotted nets have a higher overall strength and durability rating making them superior for direct impact sports like baseball and softball.
- Twisted netting has a higher abrasion resistance than braided, because twisted has less surface area than braided. This allows the balls to slide and spin off of the surface.
- Polyethylene netting doesn't absorb water—perfect for wet or humid hot climates—This is the best protection to prevent rotting.
- All JUGS nets are black and offer the best protection from the affects of sunlight—the darker the color, the greater the UV deflection.
- We incorporate the industries highest UV protection.
- JUGS netting is hydraulically depth-stretched to improve knot tightness and reduce stretching and shrinking over time.
- Baseball and Softball size mesh–1¾".
- Heavy-Duty Polypropylene Black Rope Borders on top, bottom, and vertical corners. Rib-Line Ropes down the center for extra suspension points with less sagging.
- **1-Year Guarantee on #42 and #60.**
- **2-Year Guarantee on #96.**



For complete installation instructions for Batting Cage Nets and Frames, call us or visit our website.

JUGS SPORTS **0% APR financing—Ask about our NEW Payment Plan • Call: 1-800-547-6843**

We pride ourselves in giving you the best selection and the highest quality batting cages at the lowest prices possible.

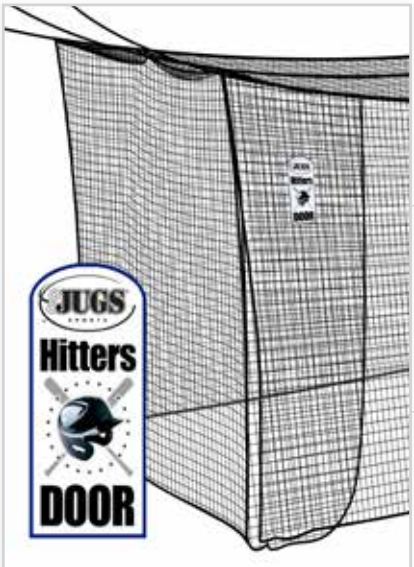

All JUGS nets come with a JUGS Hitter's Door for easy in-and-out access.

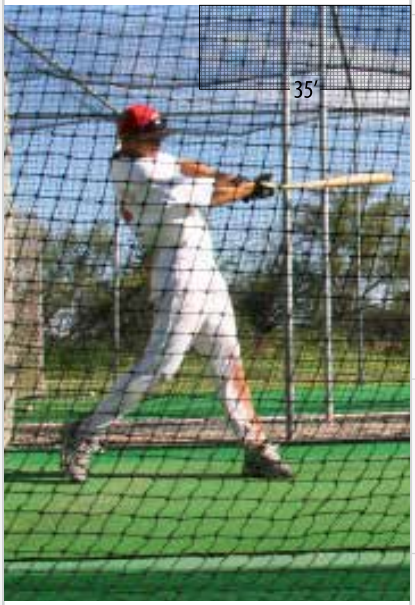



FREE Backdrop and Pitcher's Trainer with the purchase of any JUGS Batting Cage Net. A $150 Value.

10 standard sizes of batting cage nets in stock at all times.

	SIDE VIEW	END VIEW	
CAGE 1:	**70' L x 14' W x 12' H**		
#27 Polyethylene	N1110		$645
#42 Polyethylene	N1000		$1,095
#60 Polyethylene	N1005		$1,495
#96 Polyethylene	N1008		$1,995
CAGE 2:	**55' L x 14' W x 12' H**		
#27 Polyethylene	N2110		$695
#42 Polyethylene	N2000		$925
#60 Polyethylene	N2005		$1,295
#96 Polyethylene	N2008		$1,795
CAGE 3:	**55' L x 14' W x 16' H**		
#42 Polyethylene	N3000		$995
#60 Polyethylene	N3005		$1,495
#96 Polyethylene	N3008		$2,095
CAGE 4:	**35' L x 12' W x 12' H**		
#42 Polyethylene	N4001		$745
#60 Polyethylene	N4006		$995
#96 Polyethylene	N4009		$1,545
CAGE 5:	**70' L x 14' W x 16' H**		
#42 Polyethylene	N5000		$1,295
#60 Polyethylene	N5005		$1,695
#96 Polyethylene	N5008		$2,545
CAGE 7:	**65' L x 11' W x 11' H**		
#27 Polyethylene	N7310		$645
#42 Polyethylene	N7200		$895
#60 Polyethylene	N7205		$1,295
#96 Polyethylene	N7208		$1,845
CAGE 8:	**55' L x 11' W x 11' H**		
#42 Polyethylene	N8100		$795
#60 Polyethylene	N8105		$1,095
#96 Polyethylene	N8108		$1,595
CAGE 9:	**70' L x 12' W x 12'H**		
#42 Polyethylene	N1900		$995
#60 Polyethylene	N1905		$1,395
#96 Polyethylene	N1908		$1,995
CAGE 10:	**55' L x 12' W x 12' H**		
#27 Polyethylene	N2910		$595
#42 Polyethylene	N2900		$895
#60 Polyethylene	N2905		$1,295
#96 Polyethylene	N2908		$1,745

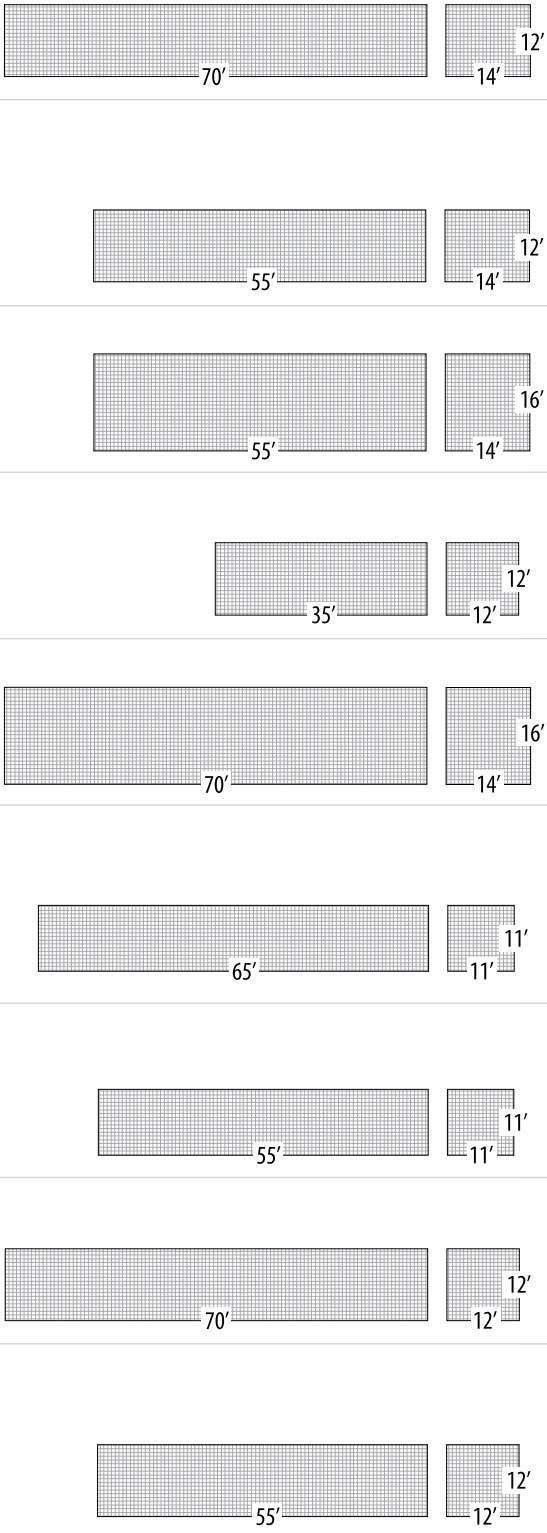

JUGS Netting Prices beat the lowest contract pricing!

Batting Cage Frames

FRAME FOR:		GAUGE:	Required Assembly Space		
CAGE 1:	70′ L x 14′W x 12′H	#27, #42	74'L x 18'W x 12'H	FR100	$1,740
		#60, #96	74'L x 18'W x 12'H	FR105	$2,940
CAGE 2:	55′ L x 14′W x 12′H	#27, #42	59'L x 18'W x 12'H	FR200	$1,740
		#60, #96	59'L x 18'W x 12'H	FR205	$2,330
CAGE 3:	55′ L x 14′W x 16′H	#42	59'L x 18'W x 16'H	FR300	$2,390
		#60, #96	59'L x 18'W x 16'H	FR305	$3,230
CAGE 4:	35′ L x 14′W x 14′H	#42, #60, #96	39'L x 18'W x 14'H	FR405	$1,760
CAGE 5:	70′ L x 14′W x 16′H	#42, #60, #96	74'L x 18'W x 16'H	FR505	$3,890
CAGE 7:	65′ L x 11′W x 11′H	#27, #42	69'L x 15'W x 11'H	FR700	$1,680
		#60, #96	69'L x 15'W x 11'H	FR705	$2,770
CAGE 8:	55′ L x 11′W x 11′H	#42	59'L x 15'W x 11'H	FR800	$1,680
		#60, #96	59'L x 15'W x 11'H	FR805	$2,160
CAGE 9:	70′ L x 12′W x 12′H	#42	74'L x 16'W x 12'H	FR190	$1,700
		#60, #96	74'L x 16'W x 12'H	FR195	$2,870
CAGE 10:	55′ L x 12′W x 12′H	#27, #42	59'L x 16'W x 12'H	FR290	$1,730
		#60, #96	59'L x 16'W x 12'H	FR295	$2,290





Every piece of pipe in a JUGS Batting Cage Frame is made of industrial-gauge galvanized steel, to give you years of trouble-free use.

- Frame sets are available for all standard-size JUGS Nets. Special-order custom-size frames are also available.
- Each frame set comes complete with uprights, crossbars, cable hooks and ground sleeves.
- Complete instructions are included so you can set up your frame quickly and easily.

All JUGS Batting Cage Frames come with a 5-Year Guarantee.

Net Installation Kits

Indoor Installation Kit:

N8000 for all JUGS nets	$190

Optional Outdoor Installation Kit:

N8010	$190

The Optional Outdoor Installation Kit gives you the option of sliding your batting cage net to the end of your frame after use.

- For #42 Nets #1, #2, #3, #7, #8. #9 and #10 and #27 Nets #1, #2, #7 and #10.

Ceiling Installation Kit:

N8005	$550

This kit includes everything you need to hang your JUGS Net so it will slide, upper wall to upper wall, on cables. It enables you to slide your net and cables easily and safely out of the way after practice.



Ceiling Installation Kits include the following: (3) 100' horizontal heavy-duty aircraft cable lengths, (35) metal snap rings, (6) turnbuckles, (30) 30' vertical cable lengths, (35) plastic snap hooks, (6) steel pulleys, (66) cable clamps and (6) eye bolts.

0% APR financing—Ask about our NEW Payment Plan • Call: 1-800-547-6843

Free-Standing Batting Cages

Perfect for backyards, or small hitting areas.



Short-Toss® Cage

The Perfect Addition to any Practice Field

- Quick-Snap® Button Connections
- This frame will fit netting of any grade: #42, #60 or #96.
- Frame Footprint: 36'L x 13'W
- Batting Cage Netting Size: 35' L X 12' W X 12' H
- 1.25" Painted Steel Tubing
- Tubing Wall Thickness: 1.5 mm

A5040	$1,595

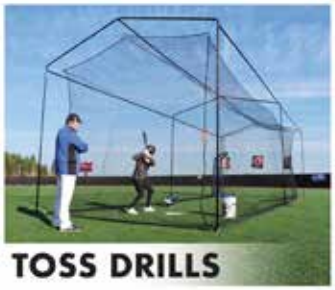







FREE-STANDING AND EASY TO SET UP

HONE YOUR SKILLS WITH INDIVIDUAL TARGET DRILLS. (3 TARGETS INCLUDED.)





Multi-Sport Instant Cage®

- Perfect for short-toss and soft-toss drills.
- Ideal for your backyard or practice field. It can be used for baseball, softball, golf, football, soccer, tennis or discus.
- Quick-Snap® connections make for fast and easy assembly.
- Makes a terrific portable backstop for batting practice and can easily be moved from place to place on your practice field.
- **5-year guarantee on frame. 1-year guarantee on netting.**

A5010	$990

Free-Standing 55-Foot Cage

Full length • No tools required • Portable

- Quick-Snap® Button Connections
- This frame will fit netting of any grade: #42, #60 or #96.
- Frame Footprint: 56'L x 13'W
- Batting Cage Netting Size: 55' L X 12' W X 12' H
- 1.25" Painted Steel Tubing
- Tubing Wall Thickness: 1.5 mm

A5000	$2,410

NEW



PROTECTOR™ SERIES
Protective Screens

Your players are bigger and stronger today. Your protective screens should be too.

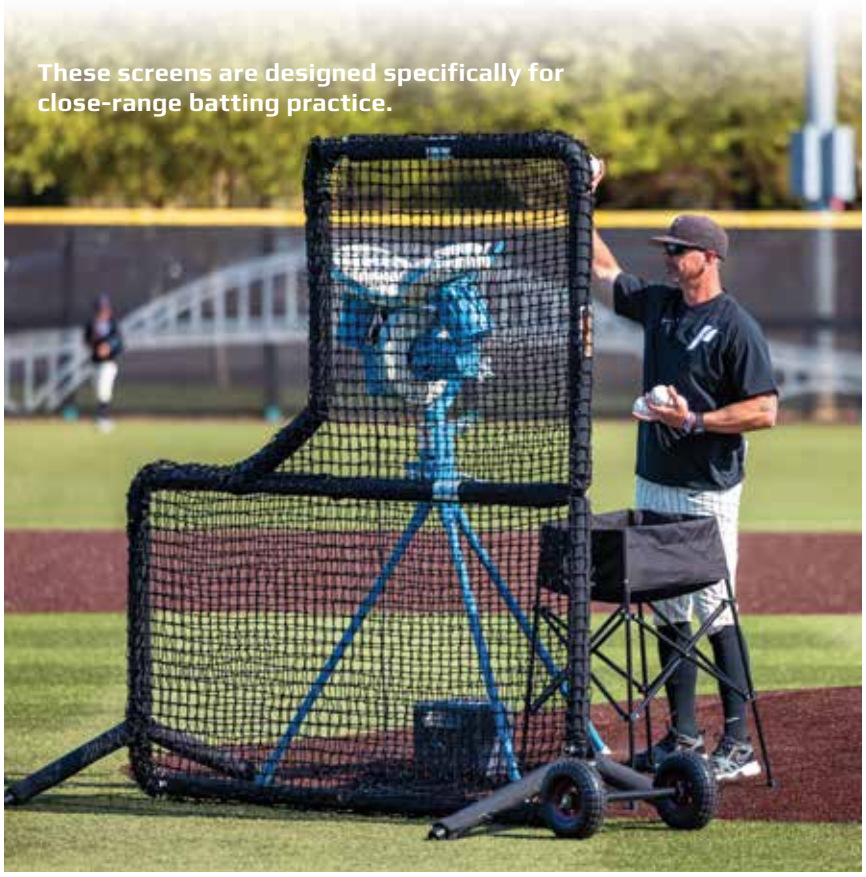





—**Robby Trebelhorn,**
Academy Sports

"To be able to purchase protective screens of this quality at these prices is amazing. These screens might possibly be the last protective screens we'll ever need to buy."

Recommended Skill Level

- High Schools
- Colleges

PRODUCT DETAILS

- **JUGS Protector Series Screens now comes standard with the Protector Series Wheel Kit.** Moving your screen has never been easier.
- Black, pearl-foam, vinyl-covered ½"-thick padding
- Black, double-thick 691-90 ply, poly-E netting
- Screens are easily assembled—no welding or lacing.
- All joints are double-bolted for maximum strength and superior longevity.
- 1½"-diameter, 2 mm-thick, 1020 cold-rolled steel frame tubing.
- **5-Year Guarantee** on frame **2-Year Guarantee** on netting against normal wear and factory defects—No one guarantees their screens longer.

FIVE-YEAR GUARANTEE 5 FIVE-YEAR GUARANTEE

5-Year Guarantee on Protector Series Screen Frames

TWO-YEAR GUARANTEE 2 TWO-YEAR GUARANTEE

2-Year Guarantee on Protector Series Screen Netting

Protector Series Wheel Kit also sold separately. See page 11.

PROTECTOR™ SERIES

4 hitting facility tough screens to choose from:



L-Shaped Screen
- 7'H x 7'W,
- 3' x 3' cutout with hip protector.
- Includes Wheel Kit

S6000 $795



Square Baseman Screen
- 7'H x 7'W
- Includes Wheel Kit

S6005 $795



Square Screen with Sock-Net™
- 7'H x 7'W
- Includes Wheel Kit

S6010 $795



Short-Toss® Screen
- 7'H x 4'W
- Includes Wheel Kit

S6020 $795



Protector™ Series Replacement Netting:

L-Shaped	S6050	$390
Square with Sock-Net™	S6060	$390
Square Baseman	S6055	$390
Short-Toss®	S6070	$350

JUGS SPORTS 0% APR financing—Ask about our NEW Payment Plan • Call: 1-800-547-6843

PROTECTOR™ BLUE SERIES
Protective Screens

Our newest protective screen offers Padded Big League protection at a minor league price!





PRODUCT DETAILS

- Black, double-thick 60 ply, Dacron poly-E netting.
- Pearl-foam, blue vinyl-covered ½"-thick padding.
- 1½"-diameter, 1.2-mm-thick, 1020 cold-rolled steel frame tubing.
- Easily assembled—no welding or lacing. All joints are bolted for strength and longevity.
- **2-Year Guarantee** on frame **1-Year Guarantee** on netting against normal wear and factory defects.



Recommended Skill Level

- Backyards, Youth Leagues, High Schools, Colleges

PROTECTOR™ BLUE SERIES

4 screens to choose from:



L-Shaped Screen
- 7'H x 7'W,
- 3' x 3' cutout

S1003	$495



8-Footer Fungo Screen
- 8'H x 8'W.

S3001	$495



Square Screen with Sock-Net™
- 7'H x 7'W.

S2012	$495



Short-Toss® Screen
- 7'H x 4'W.

S3006	$495

Protector™ Blue Series Replacement Netting:

L-Shaped	S4004	$205
Square with Sock-Net™	S4016	$215
Fungo	S5012	$240
Short-Toss®	S5016	$245

Standard Protective Screens

Designed Specifically for Youth Leagues and Backyards



Standard Screens

2 screens to choose from:



L-Shaped Screen
- 7'H x 7'W,
- 3' x 3' cutout with hip protector.

S1002	$295



Lite-Flite®/ Slowpitch Screen
- 6.5'H x 4'W
- Quick-Snap® Connections

S1021	$295

Standard Replacement Netting:

L-Shaped	S4003	$160
Lite-Flite®/Slowpitch	S4021	$150



PRODUCT DETAILS

- Black, double-thick 45 ply, Dacron poly-E netting.
- 1½"-diameter, 1.2-mm-thick, 1020 cold-rolled steel frame tubing.
- Easily assembled—no welding. L-Shaped and C-Shaped Screens are bolted together, Lite-Flite® Screen uses Quick-Snap® Connections.
- 1-Year Guarantee on netting and frame.

Travel Screens

Complete Practice Travel Screen®

- The JUGS Complete Practice Travel Screen® features nylon netting and a huge 6.5' x 6.5' Hitting Sock!
- Comes complete with 30" nylon travel bag and removable flip-over strike zone.
- Will not tip over in windy conditions.
- Designed for use with regulation size baseballs and softballs.
- Frame is made of stable ⅝" fiberglass bungee poles.
- Base is made of sturdy 1" steel tubing.
- Weighs just 25 lbs.

S0301	$169



OFFENSE



DEFENSE



PITCHING





Redesigned Instant Screen®

- Huge 7' x 8' Screen is made of sturdy lightweight spring steel, folds down to a compact 36" circle, and weighs less than 14 lbs.
- Blue nylon netting designed specifically for baseball and softball practice.
- 2D barcode gives instant access to video set up and folding instructions as well as advanced practice drills for the serious hitter.
- Improved removable pitching target.
- Fits into a nylon travel bag for easy transportation and will fit in the trunk of any car.
- Colored tabs insure proper folding

S0100	$169







The original pop-up screen is still the #1-selling screen of its kind!

NO ASSEMBLY REQUIRED

JUGS 0% APR financing—Ask about our NEW Payment Plan • Call: 1-800-547-6843

Sports Radar

RADAR CUBE™

The JUGS RADAR CUBE™ not only measures velocity, but also teaches pitchers the value of changing speeds.

- Shares the same accuracy index as the world famous JUGS Radar Gun.
- Size: 7" high x 11" wide, Weight: 1½ lbs.
- Operates on 6 AA batteries (included) or with the optional AC adapter (sold separately).
- Clock speeds from 32 mph–100+ mph.
- Large bright 3" LED numbers—Great visibility for indoor or outdoor use.
- Players, coaches and fans see real-time accurate speeds.
- Tripod mount or hanging compatible (tripod sold separately).

R2060	$360







BACKYARD BULLPEN®

Package for baseball or softball

1. **BACKYARD BULLPEN® Screen**—a huge 7' portable screen with 12 Hit-Your-Spot™ pockets.
2. **JUGS Radar Cube™ and tripod.** The JUGS Radar Cube™ shares the same accuracy index as the world famous JUGS Radar Gun: ±½ mph.
3. **(15) Perfect Pitch™ Throwing Balls.** Leather baseballs or softballs with pitch count and location on each ball.
4. **Heavy-Duty Nylon Carrying Bag**
5. **Throw-Down Home Plate**

Becoming a great pitcher is the ability to recognize the relationship between "the count" and ball location, then mastering the execution of that pitch. PERFECT PITCH™ leather baseballs and softballs teach this very thing.



CHANGEUP

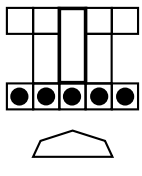



R2115 Baseball Package: $895, R2120 Softball Package: $925	
S0400 Backyard Bullpen™ Screen ONLY	$395
Perfect-Pitch™ Baseballs (15 balls) B5300 Baseballs ONLY	$100
Perfect-Pitch™ Softballs (15 balls) B5310 Softballs ONLY	$130

Practice Balls

Pearl®

The original leather baseball designed specifically for pitching machines





Unprecedented 1-Year Guarantee on the longest-lasting leather baseball made—the JUGS Pearl®.

- Regulation Size: 9-in./5-oz.
- A new high-tech thread material that is 5 times stronger than stitching used in other leather baseballs.
- Full-Grain Leather Cover.
- Cushion-Corked Center with Wool Winding.
- Great game or practice ball .

Pearl® Baseballs	B5200	$120
Bucket Pearl® Baseballs, (48 balls)	B5210	$480
Big Blue Bucket Pearl® Baseballs, (72 balls)	B5211	$720



6-DOZEN PEARL® BASEBALLS



JUGS 0% APR financing—Ask about our NEW Payment Plan • Call: 1-800-547-6843

Youth League Pearl®

Youth leagues now have an affordable leather baseball designed specifically for pitching machines.





- Regulation Size: 9-in./5-oz.
- Genuine leather cover.
- Cushion-corked center, wool winding.
- Reinforced low-seam design.
- Great game or practice ball.

Youth League Pearl® Baseballs	B5220	$70
Bucket Youth League Pearl® Baseballs, (48 balls)	B5215	$280
Big Blue Bucket Youth League Pearl® Baseballs, (72 balls)	B5216	$420

Accept no substitutes. Only JUGS® Practice Balls come with the JUGS® name on them.



6-DOZEN YOUTH LEAGUE PEARL® BASEBALLS



Practice Balls

Accept no substitutes. Only JUGS® Practice Balls come with the JUGS® name on them.

Sting-Free®

Dimpled and Seamed Pitching Machine Practice Baseballs and Softballs



For maximum accuracy and performance in your pitching machine, JUGS Sting-Free® practice balls will prove to be the best practice balls you've ever used.

- Feel like a leather ball when hit.
- Will not damage aluminum bats.
- Will not sting your hitters' hands.
- Same size and weight as leather balls.

Dimpled Baseballs	Optic Yellow	B1000	$68
Big Bucket Dimpled Baseballs (48 balls)	Optic Yellow	B1002	$282
Dimpled Baseballs	White	B1005	$68
Big Bucket Dimpled Baseballs (48 balls)	White	B1006	$282
Realistic-Seam Baseballs	White	B3000	$68
Big Bucket Seamed Baseballs (48 balls)	White	B3001	$282



NEW

Low Impact, Multi-Use Practice Baseballs







Designed specifically for advanced pitching machine batting practice. Adds up to 5 mph to your high velocity practice.(80 mph and higher)

- 9-inch, 3.5 oz. practice baseballs.
- Light-Weight, Sting-Free® ball formula will not sting your hitters hands even at higher machine speeds.
- Orange.
- Dimpled for maximum accuracy and performance.
- Will not damage bats.
- 1-Year Guarantee—No one guarantees their practice balls longer!Same size and weight as leather balls.

Multi-Use Baseballs	Orange	B1003	$68
Big Bucket Multi-Use Baseballs (48 balls)	Orange	B1007	$282

ONE-YEAR GUARANTEE 1 ONE-YEAR GUARANTEE

No one guarantees their practice balls longer!

JUGS SPORTS **0% APR financing—Ask about our NEW Payment Plan • Call: 1-800-547-6843**

SMALL-BALL®

Focus small, hit big!





- 5-in./0.5-oz., polyurethane-foam ball.
- Designed specifically to be used in the JUGS Small-Ball® Machine.
- Develop hand-eye coordination and a quick bat.
- Teach the hitter to track the ball from release point to impact zone.
- Increase the hitter's mental concentration by hitting a small ball.
- Teach the fundamentals of hitting while removing the fear factor.

⚠ WARNING
CHOKING HAZARD: THIS PRODUCT CONTAINS SMALL BALLS. NOT INTENDED FOR CHILDREN UNDER 3 YEARS.

Small-Ball®	Vision-Enhanced Yellow™	B5132	$24
Small-Ball®	White	B5130	$24
Bucket Small-Ball® (48 balls)	Vision-Enhanced Yellow™	B5140	$99
	White	B5135	$99

SOFTIE®

Official ball for JUGS® Pitching Machine League™ games.



Genuine leather cover and stitching

- Same size as regulation leather balls.
- Realistic bounce.
- Will not damage aluminum bats.
- Grips like a regulation game ball.
- Perfect for any defensive or offensive drill on any surface, indoor or outdoor.

Softie® Baseballs	B5100	$115

BULLDOG™

The toughest polyball ever made℠.



- ADVANCED FORMULA holds up even in the coldest of temperatures.
- Will last up to 30% longer than any other ball of its kind.
- 1 oz. weight for baseballs and 1½ oz. for softballs.
- Uniform holes for maximum accuracy.
- Can be used in any pitching machine for close-range batting practice.
- Available by the dozen, bucket or bulk box.

Bulldog™ Baseballs	Vision-Enhanced Yellow™	B6010	$30
	White	B6005	$30
Bulldog™ Softballs	Game-Ball™ Yellow	B7010	$40
Bucket Bulldog™ Baseballs, (24 balls)	Vision-Enhanced Yellow™	B6012	$60
	White	B6007	$60
Bucket Bulldog™ Softballs, (12 balls)	Game-Ball™ Yellow	B7012	$50
Bulk Box Bulldog™ Baseballs, (100 balls)	Vision-Enhanced Yellow™	B6011	$200
	White	B6006	$200
Bulk Box Bulldog™ Softballs, (84 balls)	Game-Ball™ Yellow	B7011	$250

Lite-Flite®

FIRMER FORMULA for maximum consistency out of your machine



- Designed specifically to be used in the JUGS Lite-Flite® Machine.
- Players see a realistic throw or pitch but do not get stung by the ball if it bounces off their arms or body. This makes the JUGS Lite-Flite® ideal for offensive or defensive drills.
- Safe for indoor hitting without a batting cage.

Lite-Flite® Baseballs	Optic Yellow	B5000	$52
Bucket Lite-Flite® Baseballs, (24 balls)	Optic Yellow	B5001	$104
Big Bucket Lite-Flite® Baseballs, (48 balls)	Yellow	B5003	$218

THE #1-SELLING PITCHING MACHINE COMPANY IN THE WORLD

11885 SW Herman Road
Tualatin, OR 97062
1-800-547-6843.
International Orders, call collect: 0-503-692-1635.
Our fax number is: 503-691-1100.
jugssports.com



TRADEMARKS AND REGISTERED TRADEMARKS:

- The following are registered trademarks of JUGS Sports: MVP® Baseball Pitching Machine, Lite-Flite® Machine, Lite-Flite®, Small-Ball® Pitching Machine, Sting-Free®, Pearl®, Softie®, Complete Practice Travel Screen®, Short-Toss®, Quick-Snap®, Seven Footer®, Instant Screen®, Small-Ball® Instant Protective Screen, Small-Ball® , Instant Backstop®, Multi-Sport Instant Cage®, Dial-A-Pitch® , JUGS®, JUGS Sports®, Backyard Bullpen®, BP®1, BP®2, BP®3, Hit at Home® and the color blue for pitching machines.
- The following are trademarks of JUGS Sports: Changeup Super Softball™ Pitching Machine, Super Softball™ Pitching Machine, 101™ Baseball Pitching Machine, Combo Pitching Machine™, Jr.™ Pitching Machine, Toss™ Machine, Football Passing Machine™, Field General™ Football Machine, Soccer Machine™, Dial-A-Speed™, Select-A-Pitch™, Pitching Machine League™, Always See The Ball™, Quick Change™, College-6™ Swing Trainer, JUGS Hitting Tee™, 5-Point Hitting Tee™, 5-Point High-Low™ Hitting Tee, Hitting Stick™, Instant Cart™, Back-Saver™ Ball Basket, Complete Practice™ Battery Pack, The JUGS Gun™, JUGSSPEED™, Optic Game-Ball Yellow™, Game-Ball Yellow™, Vision-Enhanced Yellow™, BULLDOG™, Perfect-Pitch™, Protector™ Series, Sock-Net™, Fixed-Frame™, Forever-Tight™, Practice Package™, Toss Package™, Michele Smith Softball Backyard Package™, Albert Pujols Baseball Backyard Package™, Youth League Package™, Baseball Backyard Net Package™, Softball Backyard Net Package™, Backyard Batting Cage™, Hitter's Vision™, Split Cage™, Backyard Softball Net™, Backyard Net™, Combination Net™, Half Net™, Backyard Softball Net™, Free-Standing Sports Cage™, The toughest poly ball ever made™, Hit the ball where it's pitched™, Dura-tech™, Grip-n-Go™, and Radar Cube™.

HOME OF THE TOOLS THAT BUILD BETTER PLAYERS.

WARNING

The photographs and pictures shown in this catalog were chosen for marketing purposes only and therefore are not intended to depict actual practice or game situations. **YOU MUST READ THE PRODUCT INFORMATION AND SAFETY SIGNS BEFORE USING JUGS PRODUCTS.**