FALLTECH®

User Instruction Manual

FT-R™ Class 1
3-Way Retrieval SRL-R

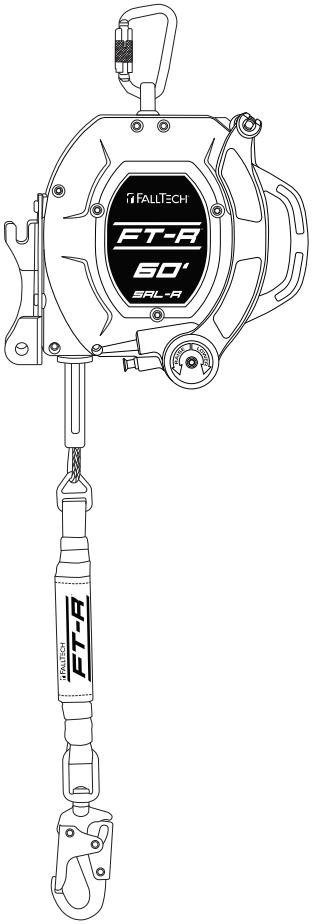

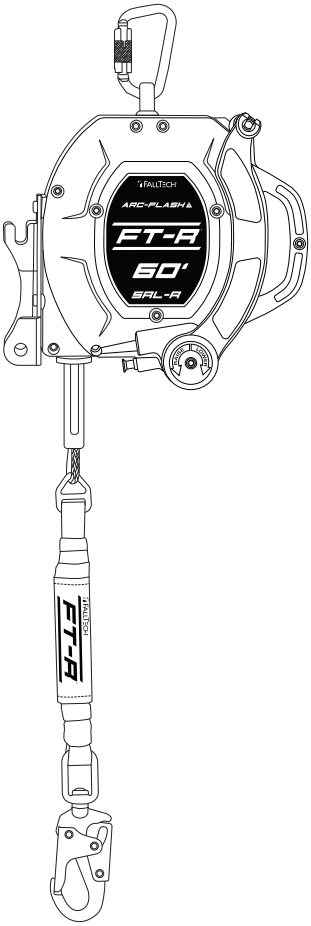

This manual is intended to meet the Manufacturer's Instructions as required by the American National Standards Institute (ANSI) Z359 and Canadian Standards Association (CSA) Z259 and should be used as part of an employee training program as required by the Occupational Safety and Health Administration (OSHA).

FallTech © 2026
1306 South Alameda Street Compton, CA 90221, USA
1-800-719-4619 • 1-323-752-0066
www.FallTech.com

MCS11 Rev B 092126 EN

Table of Contents

1.0 Warnings and Important Information.....3

2.0 Description 4

3.0 Application.....5

4.0 System Requirements.....6

5.0 Installation and Use.....8

6.0 Maintenance, Service, and Storage 14

7.0 Inspection 14

8.0 Labels 19

9.0 Definitions 21

For the purposes of this manual, the FallTech® FT-R 3-Way Retrieval SRL-R in all iterations may be referred to collectively as the FT-R, the FT-R SRL-R, the SRL-R, the Class 1 SRL, the SRL, the Class 1 SRL-R, the 3-Way, the self-retracting device (SRD), the self-retracting lifeline (SRL), the equipment, the device, the product, or the unit.

Throughout this manual, ANSI Z359.0-2012 fall protection words, phrases, and terms are used. These terms are all formally defined in Section 9 of this manual.

Any non-English translations of this user instruction manual are for reference only.

WARNING

- Avoid moving machinery, thermal, electrical, and/or chemical hazards as contact may cause serious injury or death.
- Avoid swing falls.
- Follow the weight restrictions and recommendations in this manual.
- Remove from service any equipment subjected to fall arrest forces.
- Remove from service any equipment that fails inspection.
- Do not alter or intentionally misuse this equipment.
- Consult FallTech when using this equipment in combination with components or subsystems other than those described in this manual.
- Do not connect rebar hooks, large carabiners, or large snap hooks to the FBH dorsal D-rings as this may cause a roll-out condition and/or unintentional disengagement.
- Avoid sharp and/or abrasive surfaces and edges.
- Use caution when performing arc welding. Arc flash from arc welding operations, including accidental arcs from electrical equipment, can damage equipment and are potentially fatal.
- Examine the work area. Be aware of the surroundings and workplace hazards that may impact safety, security, and the functioning of fall arrest systems and components.
- Hazards may include but not be limited to cable or debris tripping hazards, equipment failures, personnel mistakes, moving equipment such as carts, barrows, fork lifts, cranes, or dollies. Do not allow materials, tools or equipment in transit to contact any part of the fall arrest system.
- Do not work under suspended loads.

IMPORTANT

1.0 Warnings and Important Information

This product is part of a personal fall arrest, restraint, work positioning, suspension, or rescue system. A Personal Fall Arrest System (PFAS) is typically composed of an anchorage and a Full Body Harness (FBH), with a connecting device, i.e., a Energy Absorbing Lanyard (EAL), or a Self-Retracting Device (SRD), attached to the dorsal D-ring of the FBH.

These instructions must be provided to the worker using this equipment. The worker must read and understand the manufacturer's instructions for each component or part of the complete system. Manufacturer's instructions must be followed for proper use, care, and maintenance of this product. These instructions must be retained and be kept available for the worker's reference at all times. Alterations or misuse of this product, or failure to follow instructions, may result in serious injury or death.

A Fall Protection Plan must be on file and available for review by all workers. It is the responsibility of the worker and the purchaser of this equipment to assure that users of this equipment are properly trained in its use, maintenance, and storage. Training must be repeated at regular intervals. Training must not subject the trainee to fall hazards.

Consult a doctor if there is reason to doubt your fitness to safely absorb the shock of a fall event. Age and fitness seriously affect a worker's ability to withstand falls. Pregnant women or minors must not use this equipment.

ANSI limits the weight of fall protection equipment users to a maximum of 310 lbs. Products in this manual may have a rated capacity exceeding ANSI capacity limits. Heavy users experience more risk of serious injury or death due to falls because of increased fall arrest forces placed on the user's body. In addition, the onset of suspension trauma after a fall even may be accelerated for heavy users.

The user of the equipment discussed in this manual must read and understand the entire manual before beginning work.

NOTE: For more information consult the ANSI Z359 or CSA Z259 body of standards.

2.0 Description

The FallTech® FT-R 3-Way Retrieval SRL-R is a self-retracting lifeline with integral rescue capability. The FT-R SRL-Rs described in this manual has an integral hand crank to raise or lower a fallen victim to a safe level. The FT-R SRL-Rs can be attached to an overhead anchorage or attached to a FallTech Tripod or Davit systems with the included mounting bracket.

This product is not suitable for applications with leading edge exposures where the lifeline of this device may come in contact with an edge during a fall event. Contact FallTech for more information or product selection questions.

This manual contains one Appendix that contains figures and tables specific to the FT-R SRL-R discussed in this manual.

Figure 1 below shows the components of the FT-R SRL-R that may be referred to in this user instruction manual. See Table 1A in Appendix A for product and materials specifications.

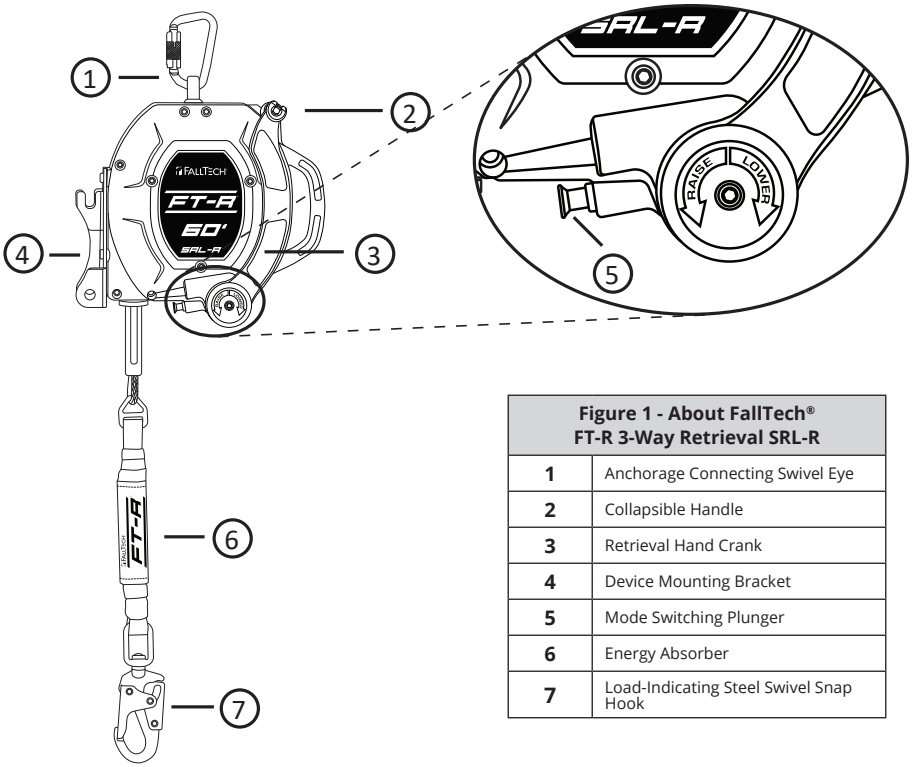

Figure 1 - About FallTech® FT-R 3-Way Retrieval SRL-R	
1	Anchorage Connecting Swivel Eye
2	Collapsible Handle
3	Retrieval Hand Crank
4	Device Mounting Bracket
5	Mode Switching Plunger
6	Energy Absorber
7	Load-Indicating Steel Swivel Snap Hook

2.1 American National Standards Institute (ANSI) and Occupational Safety and Health Administration (OSHA):
The SRD discussed in this manual meets the standards of ANSI Z359.14-2021, ANSI A10.32-2023, and Occupational Safety and Health Administration (OSHA) regulations 1926.502 and 1910.140. ANSI requires SRDs be classified according to the type of usage the user would be exposed to, and are tested either as Class 1 or Class 2. Dynamic performance means that the SRD is installed in a testing drop tower. A test weight is attachedto the SRD and then dropped. Test results are recorded.

Parameters recorded are:

- Arrest Distance (AD)
- Average Arrest Force (AAF)
- Maximum Arrest Force (MAF)

The Arrest Distance is the total vertical distance required to arrest a fall. The Arrest Distance includes the deceleration distance and the activation distance. The Average Arrest Force is the average of the forces applied to the body and the anchorage by the fall protection system. The Maximum Arrest Force is the maximum amount of force that may be applied to the body and the anchorage by the fall protection system. In addition to the above tests conducted in ambient conditions, the units must be retested for average and peak forces under certain environmental conditions, where the units are cooled, then tested, heated, then tested, or saturated in water and tested again. Separate units may be used for each test. All test results are recorded.

This test data is then used to establish the basis for fall clearance guidelines published in the user instruction manual.

Class 1 and 2: Class 1 devices shall be used only on overhead anchorages and shall be subjected to a maximum free fall of 2 feet (0.6 m) or less. Class 2 devices are intended for applications where an overhead anchorage may not be available or feasible and be subjected to a free fall of no more than 6 feet (1.8 m) over an edge.

To be declared a Class 1 and Class 2 device, ANSI requires an SRD to have an overhead Arrest Distance of less than 42” (1.1 m), an Average Arrest Force of less than 1,350 lbs (6 kN) [1,575 lbs (7 kN) conditioned] and a Maximum Arresting Force of 1,800 lbs (8 kN), for both ambient and conditioned testing.

When dynamically tested in accordance with requirements of ANSI Z359.14-2021, FallTech Class 1 and Class 2 Self-Retracting Devices have an AAF of 1,350 lbs (6 KN) or less and an AD of less than 42” (1.1 m).

Please see Section 5 of this user instruction manual for how to calculate your Minimum Required Fall Clearance (MRFC). Classification information found on product labels is based on test results. Table 1B provides test performance results for the SRD discussed in this manual.

2.2 Canadian Standards Organization (CSA):
The FT-R SRL-LE described in this manual, when used per the instruction in this manualmeets or exceeds CSA Z259.2.2-2017. CSA requires that all SRDs be classified according to their respective type, and are classified either as; Class SRL, Class SRL-R, Class SRL-LE, or Class SRL-LE-R. The FT-R SRL-LE Self Retracting Device in this manual is Class SRL-LE.

CSA Test Parameters used in this manual are:

- Arrest Distance (AD)
- Average Arrest Force (AAF)
- Maximum Arrest Force (MAF)

The Arrest Distance is the total vertical distance required to arrest a fall. The Arrest Distance includes the deceleration distance and theactivation distance. The Average Arrest Force is the average of the forces applied to the body and the anchorage by the fall protection system. The Maximum Peak Arrest Force is the maximum amount of force that may be applied to the body and the anchorage by the fall protection system. In addition to the above tests conducted in ambient conditions, the units must be retested for average and peak forces under certain environmental conditions, where the units are cooled, then tested, and saturated in water and tested again. Separate units are used for each test. All test results are recorded.

3.0 Application

3.1 Purpose:
The FallTech® FT-R 3-Way Retrieval SRL-R is designed to be used as a component in a Personal Fall Arrest System (PFAS), to provide a combination of worker mobility and fall protection as required for inspection work, general construction, maintenance work, oil production, confined space work, etc. The SRL-R described in this manual has rescue capability in the event of a fall. By switching the mode of the unit, the fallen victim can be then raised or lowered to safety.

3.2 Personal Fall Arrest System:
A PFAS is an assembly of components and subsystems used to arrest a person during a fall event. A PFAS typically consists of an anchorage, a deceleration device such as an Energy Absorbing Lanyard (EAL), a Self-Retracting Device (SRD), or a Fall Arrestor Connecting Subsystem (FACSS), and a properly fitted Full Body Harness (FBH). Maximum permissible free fall in a typical PFAS is 6' (1.8 m).

3.3 Application Limits:
The FallTech FT-R 3-Way Retrieval SRL-R is a deceleration device with integral rescue capability. Care should be taken to understand the capacity of the system, anchorage strength requirements, total allowable free fall, and the requirements how the user's PFAS deploys during a fall event. The longer the freefall, the greater the energy in the system and will result in more significant clearance requirements and impact forces on the body. Take action to avoid sharp edges, abrasive surfaces, and thermal, electrical, and chemical hazards.

Note: The FallTech FT-R 3-Way Retrieval SRL-R discussed in this manual is not intended for material handling applications.

3.4 Approved Applications:
Below are applications for which all FallTech FT-R 3-Way Retrieval SRL-R are specifically suited. This list is not all-inclusive, but is intended to anticipate the most common applications in which this product may be used.

3.4.1 Personal Fall Arrest:
The FallTech FT-R 3-Way Retrieval SRL-R used as the deceleration device component of a PFAS to protect the user in the event of a fall. PFAS typically consists of an anchorage, a Full Body Harness (FBH), and a deceleration device such as a Energy Absorbing Lanyard (EAL) or Self Retracting Device (SRD).

3.4.2 Rescue:
The FallTech FT-R 3-Way can be used for rescue after a fall event. Ensure a written rescue plan, method, and system is in place and readily available for rapid response. Rescues may require specialized equipment or measures. Rescue operations are beyond the scope of this manual. See ANSI Z359.4 and Z359.2.

4.0 System Requirements

4.1 Capacity:
The FT-R SRL-R is designed for use by a single user with a combined weight of user, tools, clothing, etc., of 130–310 lbs (59-141 kg).

4.2 Compatibility of Connectors:
Connectors are considered to be compatible with connecting elements when they have been designed to work together in such a way that their sizes and shapes do not cause their gate mechanisms to inadvertently open regardless of how they become oriented. Contact FallTech if you have any questions about compatibility. Connectors must be compatible with the anchorage or other system components. Do not use equipment that is not compatible. Non-compatible connectors may unintentionally disengage. Connectors must be compatible in size, shape, and strength. Self-closing, self-locking connectors are required by ANSI and OSHA.

4.3 Compatibility of Components:
Equipment is designed for use with approved components and subsystems only. Substitutions or replacements made with non-approved components or subsystems may jeopardize compatibility of equipment and may affect the safetyand reliability of the complete system.

4.4 Making Connections:
Only use self-locking connectors with this equipment. Only use connectors that are suitable to each application.Ensure all connections are compatible in size, shape, and strength. Do not use equipment that is not compatible, see Figure 3. Visually ensure all connectors are fully closed and locked. Connectors are designed to be used only as specified in each product's user's instructions.

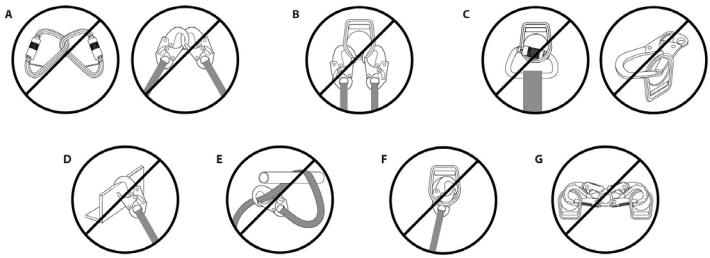

Figure 3 - Non-Compatible Connections	
A	Never connect two active components (snap hooks or carabiners) to each other.
B	Never connect two active components (snap hooks or carabiners) to a single D-ring at the same time.
C	Never connect in a way that would produce a condition of loading on the gate.
D	Never attach to a object in a manner whereby the gate (of the snap hook or carabiner) would be prevented from fully closing and locking. Always guard against false connections by visually inspecting for closure and lock.
E	Never attach explicitly to a constituent subcomponent (webbing, cable or rope) unless specifically provided for by the manufacturer's instructions for both subcomponents (snap hook or carabiner and webbing, cable or rope).
F	Never attach in a manner where an element of the connector (gate or release lever) may become caught on the anchor thereby producing additional risk of false engagement.
G	Never attach a spreader snap hook to two side/positioning D-rings in a manner whereby the D-rings will engage the gates; the gates on a spreader must always be facing away from the D-rings during work positioning.

4.5 Personal Fall Arrest System:
A PFAS is an assembly of components and subsystems used to arrest a person during a fall event. A PFAS is typically composed of an anchorage and a FBH, with an energy absorbing connecting device, i.e., an SAL, an SRD, or a Fall Arrester Connecting Subsystem (FACSS), connected to the dorsal D-ring of the FBH. PFAS components used in conjunction with this SRD should comply with ANSI Z359 requirements, and applicable OSHA regulations.

4.6 PFAS Anchorage Strength:
An anchorage selected for PFAS must have a strength able to sustain a static load applied in the direction permitted by the PFAS of at least:

a. Two times the maximum arrest force permitted when certification exists, or
b. 5,000 lbs. (22.2 kN) in the absence of certification.

Select an anchorage location carefully. Consider structural strength, obstructions in the fall path, and swing fall hazards. In certain situations, the qualified person can determine that a given structure is able to withstand the applied MAF of the PFAS with a safety factorof at least two, as required by OSHA.

⚠ WARNING

Do not alter or intentionally misuse this equipment. Consult FallTech when using this equipment in combination with components or subsystems other than those described in this manual. All components or subsystems used with the SRD discussed in this manual must be in compliance with ANSI Z359 and/or OSHA.

WARNING

Do not use rebar hooks, large carabiners, or large snap hooks to connect to the FBH dorsal D-rings or to any small diameter non-compatible anchor point as this may cause a roll-out condition and/or unintentional disengagement.

Do not insert extra connectors between the SRD lifeline connector and the FBH dorsal D-ring, except an approved D-ring extender. Use caution. Take action to avoid sharp and/or abrasive surfaces and edges.

5.0 Installation and Use

5.1 Install the SRD

Examine the work area for possible hazards. Take caution to avoid overhead hazards such as cranes, poles, overhead power cables, and walking/working surface hazards such as power cables, welding leads, air, and fluid hoses, including obstruction hazards such as vertical columns and stacks of materials on the lower level. Eliminate hazards where possible.

Ensure the anchorage provides the Minimum Required Fall Clearance (MRFC) in the fall path below the walking/working surface to prevent striking the lower level or an obstruction during a fall event. Take action to avoid swing falls, which occur when the anchorage is not directly above the point where the fall occurs.

Fall clearance and swing falls are subject to variable conditions. Anchor height, lateral movement, and setback distance all affect anchor location with regard to fall clearance and swing fall.

The SRD may be attached to an overhead anchor, Figure 4, i.e. above the user's FBH dorsal D-ring. The SRL-R discussed in this manual is not designed for Leading Edge applications.

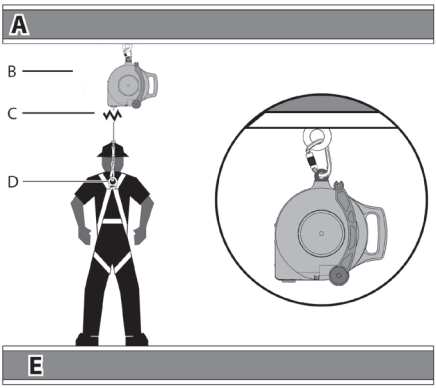

Figure 4 - SRL-R Overhead Anchorage	
A	Overhead Anchorage
B	FT-R SRL-R
C	Lifeline
D	Connection to FBH
E	Walking/Working Surface

5.2 Calculating Minimum Required Fall Clearance

5.2.1 FT-R SRL-R in Overhead, Non-Leading Edge Anchorage Application

The SRL-R may be used may be used as a standard SRD in an overhead condition, in which the SRD is installed anywhere in the allowable attachment area, which ranges from directly above the user to level with the FBH D-ring, as shown in Figure 5.

The overhead condition minimum required fall clearance (MRFC) is calculated using four metrics, measured from the walking-working surface: SRD Deceleration Distance, D-Ring Shift and Harness Stretch [1 ft (0.3m)], Safety Factor [1.5 ft (0.5m)], and Swing Fall. Chart 1 below is calculated using the performance data of the SRD and includes all four metrics listed previously to determine the MRFC.

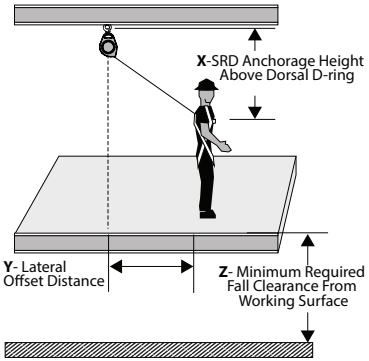

Figure 5

Chart 1 - MRFC Overhead Anchorage

Chart 1 Overhead	Lateral Offset Distance (Y) →												
SRD Anchorage Height Above Dorsal D-Ring (X)	0 ft (0 m)	2 ft (0.7 m)	4 ft (1.3 m)	6 ft (1.9 m)	8 ft (2.5 m)	10 ft (3.1 m)	12 ft (3.7 m)	14 ft (4.3 m)	16 ft (4.9 m)	18 ft (5.5 m)	20 ft (6.1 m)	22 ft (6.8 m)	24 ft (7.4 m)
60 ft (18.3 m)	6.0 (1.9)	6.5 (1.9)	6.5 (1.9)	6.5 (2.0)	7.0 (2.0)	7.0 (2.1)	7.5 (2.2)	8.0 (2.4)	8.5 (2.5)	9.0 (2.7)	9.5 (2.9)	10.0 (3.1)	11.0 (3.3)
55 ft (16.8 m)	6.0 (1.9)	6.5 (1.9)	6.5 (1.9)	6.5 (2.0)	7.0 (2.1)	7.0 (2.2)	7.5 (2.3)	8.0 (2.4)	8.5 (2.6)	9.0 (2.8)	10.0 (3.0)	10.5 (3.2)	11.5 (3.4)
50 ft (15.3 m)	6.0 (1.9)	6.5 (1.9)	6.5 (1.9)	6.5 (2.0)	7.0 (2.1)	7.0 (2.2)	7.5 (2.3)	8.0 (2.5)	8.5 (2.6)	9.5 (2.8)	10.0 (3.1)	11.0 (3.3)	11.5 (3.5)
45 ft (13.8 m)	6.0 (1.9)	6.5 (1.9)	6.5 (1.9)	6.5 (2.0)	7.0 (2.1)	7.5 (2.2)	8.0 (2.4)	8.5 (2.5)	9.0 (2.7)	9.5 (2.9)	10.5 (3.2)	11.5 (3.4)	12.0 (3.7)
40 ft (12.2 m)	6.0 (1.9)	6.5 (1.9)	6.5 (1.9)	6.5 (2.0)	7.0 (2.1)	7.5 (2.3)	8.0 (2.4)	8.5 (2.6)	9.5 (2.8)	10.0 (3.1)	11.0 (3.3)	12.0 (3.6)	13.0 (3.9)
35 ft (10.7 m)	6.0 (1.9)	6.5 (1.9)	6.5 (1.9)	7.0 (2.0)	7.0 (2.2)	7.5 (2.3)	8.0 (2.5)	9.0 (2.7)	9.5 (2.9)	10.5 (3.2)	11.5 (3.5)	12.5 (3.8)	13.5 (4.1)
30 ft (9.2 m)	6.0 (1.9)	6.5 (1.9)	6.5 (2.0)	7.0 (2.1)	7.5 (2.2)	8.0 (2.4)	8.5 (2.6)	9.5 (2.8)	10.0 (3.1)	11.0 (3.4)	12.5 (3.7)	13.5 (4.1)	14.5 (4.4)
25 ft (7.7 m)	6.0 (1.9)	6.5 (1.9)	6.5 (2.0)	7.0 (2.1)	7.5 (2.3)	8.0 (2.5)	9.0 (2.7)	10.0 (3.0)	11.0 (3.3)	12.0 (3.6)	13.5 (4.0)	14.5 (4.4)	16.0 (4.8)
20 ft (6.1 m)	6.0 (1.9)	6.5 (1.9)	6.5 (2.0)	7.0 (2.1)	8.0 (2.3)	8.5 (2.6)	9.5 (2.9)	10.5 (3.2)	12.0 (3.6)	13.0 (4.0)	14.5 (4.4)	16.0 (4.8)	17.5 (5.3)
15 ft (4.6 m)	6.0 (1.9)	6.5 (1.9)	7.0 (2.0)	7.5 (2.2)	8.0 (2.5)	9.5 (2.9)	10.5 (3.2)	12.0 (3.6)	13.0 (4.0)	14.5 (4.4)	16.0 (4.9)	18.0 (5.4)	19.5 (5.9)
10 ft (3.1 m)	6.0 (1.9)	6.5 (1.9)	7.0 (2.1)	8.0 (2.4)	9.0 (2.7)	10.5 (3.1)	12.0 (3.6)	13.5 (4.1)	15.0 (4.6)	17.0 (5.1)	18.5 (5.6)	20.5 (6.2)	22.0 (6.8)
5 ft (1.6 m)	6.0 (1.9)	6.5 (1.9)	7.5 (2.3)	9.0 (2.7)	10.5 (3.1)	12.5 (3.6)	14.0 (4.1)	16.0 (4.6)	18.0 (5.5)	20.0 (6.0)	22.0 (6.6)	24.0 (7.2)	26.0 (7.8)
0 ft (0 m)	6.0 (1.9)	8.0 (2.5)	10.0 (3.1)	12.0 (3.7)	14.0 (4.3)	16.0 (4.9)	18.0 (5.5)	20.0 (6.1)	22.0 (6.8)	24.0 (7.4)	26.0 (8.0)	28.0 (8.6)	30.0 (9.2)

Using Chart 1 to Calculate Minimum Required Fall Clearance for the FT-R

2 foot (0.6 m) increments along the Y-Axis represent the Lateral Offset Distance the user is working away from being directly under the SRD	5 foot (1.5 m) increments up the X-Axis represent the SRD Anchorage Height above the user's Dorsal D-Ring

Example:
If the user needs to work 10 feet (3.1 m) away from directly under the SRD, the SRD needs to be anchored at least 15 feet (4.6 m) above the user's Dorsal D-Ring. Minimum required fall clearance is 9.5 feet (2.9 m) at maximum allowable swing fall.

Example:
If the only suitable Anchorage for the SRD is at D-Ring height [0.0 feet (0.0 m)] above the user's Dorsal D-Ring, the maximum allowable work zone is 4 feet (1.3 m) away from the SRD. Minimum required fall clearance is 10.0 feet (3.1m) at maximum allowable swing fall.

Key to Work Zone Areas:

☐ = Allowable Use Area ■ = Not Allowed Use Area

⚠ **WORKING IN THIS AREA** ■ **MAY RESULT IN SERIOUS INJURY OR DEATH**

5.3 SRL-R Install onto a FallTech Universal Device Receiver Bracket for Tripods or Davits

1. Remove the top detent pin from the FallTech Universal Device Receiver Bracket.
2. Place the notch in the SRL-R bracket over the bottom bar of the FallTech Universal Device Receiver Bracket as shown in Figure 6.
3. Rotate the SRL-R bracket to align the upper holes as shown in Figure 7.
4. Insert the provided detent pin ensuring it goes through both sides of the bracket as shown in Figure 8.

Please see FallTech Tripod or Davit user instruction manuals for instructions, requirements, and compatibility when using the FT-R SRL-R with a FallTech Tripod or Davit system.

Figure 6

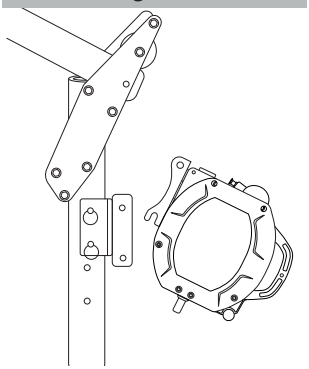

Figure 7

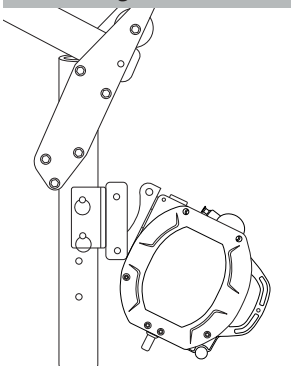

Figure 8

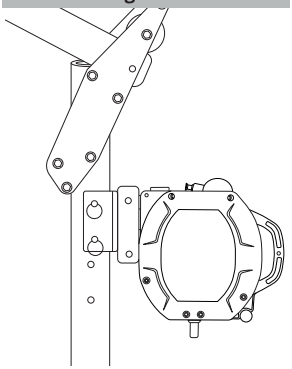

5.4 Device Bracket Removal and Installaton onto SRL-R

Remove the three bolts to remove the bracket. To install, align the three holes in the bracket with the SRL-R housing and torque the bolts to 19 ft-lbs (26 Nm); see Figure 9.

Figure 9 - Bracket Removal/Installation

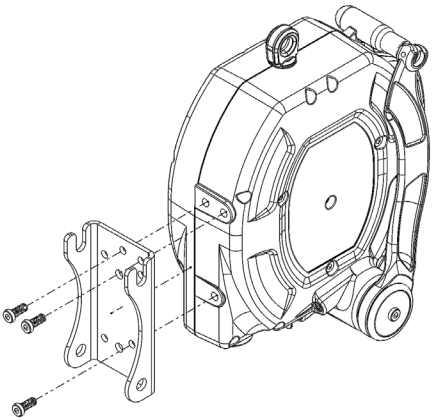

5.5 Using the FT-R 3-Way Retrieval SRL-R

WARNING

The FallTech® FT-R 3-Way Retrieval SRL-R retrieval function discussed in this manual is only to be used in the event of an emergency and is not intended for material handling or routine personnel hoisting applications.

5.5.1 Rescue/Retrieval Mode

1. Unfold the black collapsible handle by pulling the handle outward to unlock the position lock; see Figure 10A. Rotate the handle 180 degrees until it locks into position; see Figure 11A.
2. Pull the Crank Engagement Pin; see Figure 11B and simultaneously push the Hand Crank toward the SRL-R housing; see Figure 11C. It may be necessary to slightly rotate the handle to mesh the gears into position.
3. Release the Crank Engagement Pin once the gears are fully meshed to lock the handle in Rescue/Retrieval Mode. The Crank Engagement Pin should be fully retracted into the SRL-R body.
4. To raise, turn the handle in the counter clockwise direction if the handle is facing you with the anchor eye on top, see Figure 12. When fully loaded, a force of up to 30 lbs. will be required to operated the handle. To lower turn the handle clockwise; see Figure 13. The handle will rotate a half a turn before the load begins to lower or raise. Maintain a minimum of 15 lbs of tension in both directions on the cable at all times to prevent bird nesting of the cable onto the drum.

Figure 10 - Rescue/Retrieval Mode

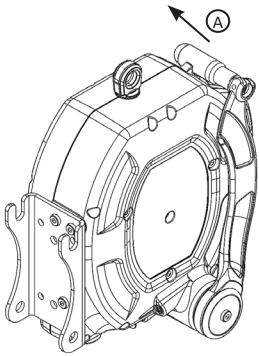

Figure 11 - Rescue/Retrieval Mode

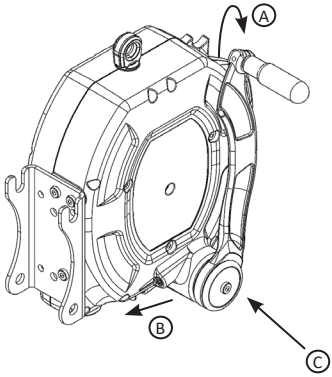

Figure 12 - Raising

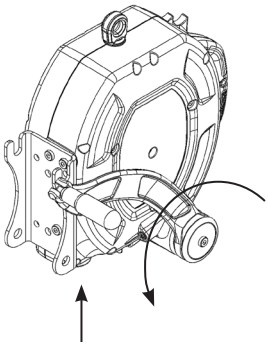

Figure 13 - Lowering

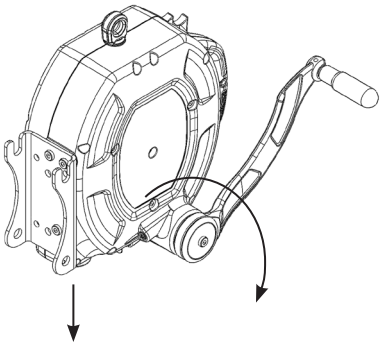

5.6 Self-Retracting Lifeline (Fall Arrest) Mode

1. Leave approximately one foot of cable extended out of the SRL-R housing. Place the handle in a vertical position and fold the black collapsible handle by pulling the black handle out to release the handle lock mechanism and rotate it 180 degrees; see Figure 14A.
2. Pull the Crank Engagement Pin; see Figure 14B and simultaneously pull the Hand Crank away from the SRL-R housing; see Figure 14C. The cable will retract back into the housing when the gears are disengaged.
3. Release the Crank Engagement Pin once the handle in Fall Arrest Mode. The Crank Engagement Pin should be fully retracted into the SRL-R body.

Figure 14 - Return to Fall Arrest Mode

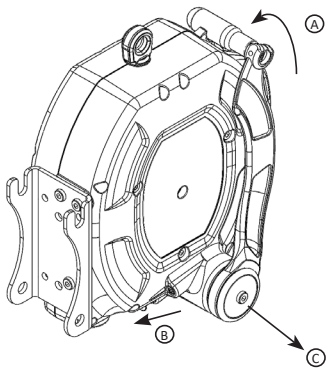

5.7 Operation of the SRL-R:
Before each use, inspect the SRL-R. See Section 7 for inspection instructions.

5.7.1 Locking Mechanism:
The SRD utilizes an acceleration based locking mechanism. The locking function requires a certain payout rate during a fall event to function correctly. Certain situations, confined or cramped spaces, shifting footing such as sand, gravel, grain, or a sloped surface may not allow the lifeline to reach sufficient speed to activate the lock mechanism. A clear path is required to assure positive locking of the SRD. Ensure the lock is functioning properly. Pull the lifeline out a short distance and give it a sharp tug. The lifeline must lock. If it fails to lock, remove it from service immediately. Ensure the work zone remains within stated parameters.

DO NOT attach an additional shock absorbing lanyard or similar device between the SRD housing and the anchorage.

5.7.2 Fall Arrest Impact Indicator:
The primary fall arrest impact indicator is the load-indicating Energy Absorber. The Energy Absorber will elongate and expose white fuzzy webbing if it has been subjected to fall arrest, or equal, forces, as shown in Figure 13, Image B. If the Energy Absorber shows any sign of damage, torn or ripped cover, frayed thread, burns or trauma of any kind, remove the unit from service.

Figure 15 - Inspecting SRL-R Load-Indicating Energy Absorber

5.7.4 Inspect the Lifeline:
The SRD lifeline is cable/wire rope or Technora® rope, and subject to certain hazards. Inspect the lifeline before each use for the conditions as described in Section 7.

5.8 Using the SRL-R:
Do not use the SRL-R if inspection shows damage or any malfunction. Don the FBH in accordance with the FBH manufacturer's instructions. Follow the instructions contained in this manual and on the labels. Failure to follow instructions may result in serious injury or death. Connect the leg end snap hook to the dorsal D-ring on the FBH. Ensure the carabiner closes and locks. Attach the housing carabiner to the chosen anchorage and ensure the carabiner closes and locks. Ensure all connections are compatible. Normal operation will allow the working length of the lifeline to extend and retract as the worker moves about. A certain amount of tension must remain on the cable at all times to ensure proper operation of the internal brake. Do not allow the lifeline to have slack. If the lifeline does not retract, remove the SRL-R from service for inspection. See Section 7.

Avoid sudden or quick movements during the normal work operation, as this may cause the SRL-R brake to engage and possibly cause loss of balance which may result in injury or death.

If a fall occurs, the brake will engage and lock the lifeline to arrest the fall and limit arrest forces on the user.

- DO NOT extend the lifeline past the operational limit.
- DO NOT allow one SRD lifeline to become tangled or twisted with another SRD lifeline during use.
- DO NOT allow any lifeline to pass under arms or between legs during use.
- DO NOT clamp, knot, or prevent the lifeline from retracting or being taut.
- DO NOT lengthen the SRD by connecting a lifeline or similar component.
- DO NOT allow the lifeline to remain outside the housing when not in use.
- DO NOT allow the lifeline to freewheel back into the housing. Use a tag line to maintain tension and rewind the lifeline during periods of inactivity. Use the tag line to retrieve the leg end connector for the next use.
- DO NOT leave the tag line connected to the leg end connector when using the SRD for fall protection.

5.9 After A Fall:
A fall event over an edge may require special rescue equipment and measures. Ensure a written rescue plan, method and system is in place and readily available to all users for rapid response. Ensure all users are trained in rescue procedures. If a fall event occurs, remove it from service, and store it separately. Remove from service any unit that has been subjected to fall arrest forces or that exhibits damage consistent with such forces. For questions, contact FallTech.

6.0 Maintenance, Service, and Storage

6.1 Maintenance:
Ensure the SRL-R is kept free of excess paint, grease, dirt or other contaminants as this may cause to cable or retracting mechanism to malfunction. Ensure no debris enters the housing through the cable access port. Clean the exterior of the unit as required with a detergent/water solution. Avoid water other corrosion causing elements to enter the housing. After cleaning, pull the lifeline all the way out, allow the unit to air dry, then retract the lifeline into the unit. Do not allow the lifeline to freewheel back into the housing. Clean labels as required.

- DO NOT use heat to dry.
- DO NOT attempt to disassemble the SRD.

6.2 Service:
If service is required for any reason; inspection failure, impact loaded, any type of malfunction, tag the unit as “UNUSABLE”, store separately, and contact FallTech at 323-752-0066 to receive a Return Authorization number or to locate the nearest FallTech Service Center. The SRL-R is not user repairable. Only the manufacturer, or a repair facility authorized in writing, may make repairs to the SRL-R. This SRL-R is designed to be used installed in an anchor cradle or attached overhead.

6.3 Storage:
Hang the SRL-R in a cool, dry, clean environment out of direct sunlight. Position the SRL-R so excess water can drain out. Avoid exposure to chemical or caustic vapors. Thoroughly inspect the SRL-R after any period of extended storage.

7.0 Inspection

7.1 Pre-Use User Inspection for Cable SRL-R:
Perform an inspection before each use in accordance with the recommendations in Table 1 below.

Table 1 - Guidelines for Cable SRL-R Inspection		
Inspection	**Pass**	**Fail**
The cable lifeline should extract and retract completely and without faltering and should remain taut under tension without sagging.		
Extract the cable lifeline several inches and apply a firm pull to confirm the SRD locks. The locking should be certain and without skidding. Repeat this lockup at additional places along the lifeline length to confirm the SRD is operating correctly.		
Examine the load indicator on the Energy Absorber to be certain that it has not been loaded, impacted or activated; see Figure 15. Inspect the Energy Absorber. If the Energy Absorber shows any sign of damage, torn or ripped cover, frayed thread, burns or trauma of any kind, remove the unit from service.		
Inspect the entire length of the cable lifeline. Review the cable lifeline closely for broken strand wires, welding spatter burns, welding slag, bird-caging, kinks and bent strands. Also examine for rust, dirt, paint, grease or oil. Check for damage caused by chemical corruption or excessive heat as evident with discoloration. See Figure 17 for examples. If any of these conditions exist, remove the SRD from service.		
Check the mode changing function by placing the SRL-R into Retrieval/Rescue mode and back to Fall Arrest mode to ensure proper operation.		
Check for any missing or loose screws or nuts and any deformed or damaged components.		
Examine the external housing for cracks, breaks or warping.		
Check the external Connector Eye and the Anchorage Carabiner for damage and deformation. The Anchorage Carabiner Gate should twist open and snap shut easily and smoothly.		
Examine the external housing and mounting bracket for cracks, breaks or warping.		
All labels must be intact and totally legible (see Section 8).		

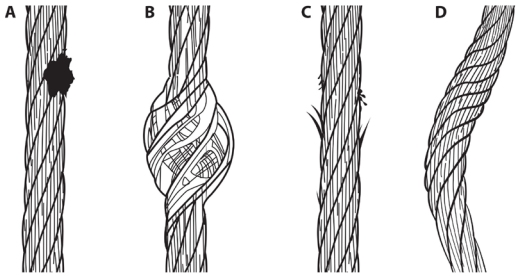

Figure 17: Inspection of Cable

Extract all of the cable and check the entire working length for damage caused by chemical corrosion or excessive heat as evident by discoloration (A), bird caging (B), broken wire strands (C), kinks and bent strands (D), see Figure 9. The cable should retract completely without faltering and should remain taut under tension without sagging.

7.2 Pre-Use User Inspection for Technora Rope SRL-R:
Perform an inspection before each use in accordance with the recommendations in Table 2 below.

Table 2 - Guidelines for Technora Rope SRL-R Inspection		
Inspection	**Pass**	**Fail**
The rope lifeline should extract and retract completely and without faltering and should remain taut under tension without sagging.		
Extract the rope lifeline several inches and apply a firm pull to confirm the SRD locks. The locking should be certain and without skidding. Repeat this lockup at additional places along the lifeline length to confirm the SRD is operating correctly.		
Examine the load indicator on the Energy Absorber to be certain that it has not been loaded, impacted or activated; see Figure 15. Inspect the Energy Absorber. If the Energy Absorber shows any sign of damage, torn or ripped cover, frayed thread, burns or trauma of any kind, remove the unit from service.		
Inspect the entire length of the lifeline. Review the rope lifeline closely for broken strands, welding spatter burns, welding slag, abrasion damage, glazing, changes in or variable rope diameter, discoloration, changes in flexibility, kinking, or hockling. Also examine for rust, dirt, paint, grease or oil. Check for damage caused by chemical corruption or excessive heat as evident with discoloration. If any of these conditions exist, remove the SRD from service. • Abrasion: Rupture or fraying of fibers due to wear and/or due to motion against other fibers, rope components, or a contact surface. • Glazing: A fusing or melting of the fibers that gives a hard glassy surface due to overheating or excessive friction over a surface or the rope itself. • Diameter Integrity: An increase or decrease in rope diameter due to excessive abrasion, glazing, foreign objects in the core, or reduction in core size due to broken fibers. • Discoloration: Fading, streaking, or staining due to chemical, UV, environment, or other outside agents that may cause a reduction of strength of the rope. • Flexibility: A loss in the ability to bend for the type and construction of the rope, hard or soft spots. • Core Fiber Exposure: The core from the center of the rope may work itself through the cover and may cause a loss of strength and the ability of the rope to function over a sheave. • Kinking or Hockling: A short twist, curl, or bend in one or more of the yard or rope strands, will cause a reduction in rope strength. It may be possible to work the kink out, but if the strand is still distorted the strength reduction will occur.		
Check the mode changing function by placing the SRL-R into Retrieval/Rescue mode and back to Fall Arrest mode to ensure proper operation.		
Check for any missing or loose screws or nuts and any deformed or damaged components.		
Examine the external housing and mounting bracket for cracks, breaks, or warping.		
Check the external Connector Eye and the Anchorage Carabiner for damage and deformation. The Anchorage Carabiner Gate should twist open and snap shut easily and smoothly.		
Examine the overall SRD unit for any indications of deterioration or damage.		
All labels must be intact and totally legible (see Section 8).		

WARNING

Fiber rope will fail if worn, damaged, abused, overloaded, or not properly maintained. Rope failure can cause serious injury or death if you do not read and understand all manufacturer's instructions before use.

7.3 Inspection Frequency:
Inspection by a competent person at regular intervals is required. The competent person will use the information in Table 3: SRD Inspection Recommendations, to determine the inspection frequency. Use Table 3 to determine the inspection frequency. Inspection by a factory authorized inspection entity at regular intervals is also required.

Table 3 - ANSI/ASSP Z359.14 SRD Inspection Frequency Recommendations			
Type of Use	**Application Examples**	**Conditions of Use**	**Inspection Frequency Competent Person**
Infrequent to Light Use	Rescue and Confined Space, Factory Maintenance	Good Storage Conditions, Indoor or Infrequent Outdoor use, Room Temperature, Clean Environments	Annually
Moderate to Heavy Use	Transportation, Residential Construction, Utilities, Warehouse	Fair Storage Conditions, Indoor and extended outdoor use, All temperatures, Clean or dusty environments	Semi-annually to Annually
Severe to Continuous Use	Commercial Construction, Oil and Gas, Mining	Harsh Storage Conditions, Prolonged or Continuous outdoor Use, all temperatures, Dirty environments	Quarterly to Semi-annually

7.4 Inspection Checklist:
Use Table 1: Guidelines for Cable SRL-R Inspection to inspect the SRL-R. See Figure 14 for examples of cable damage.

Or use Table 2: Guidlines for Technora Rope SRL-R Inspection to inspect the SRL-R.

7.5 Inspection Results:
If an inspection reveals defects in or damage to the equipment, inadequate maintenance or activated fall indicators,remove the equipment from service.

7.6 Inspection Document:
Record inspection results on the Inspection Record provided below or on a similar document.

Inspection Record					
Model #:_____ Serial #:_____ Date of Manufacture:_____					
INSPECTION DATE	**INSPECTOR**	**COMMENTS**	**PASS/ FAIL**	**CORRECTIVE ACTION NEEDED**	**APPROVED BY**

8.0 Labels

Product labels must be present and legible.

8.1 Cable SRL-R Labels

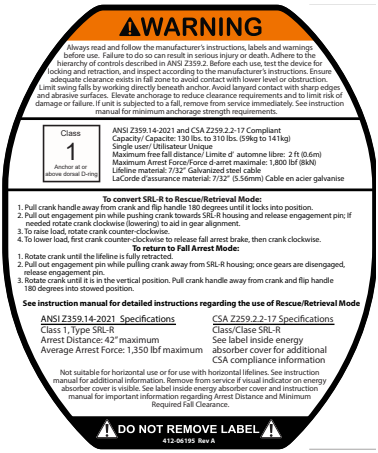

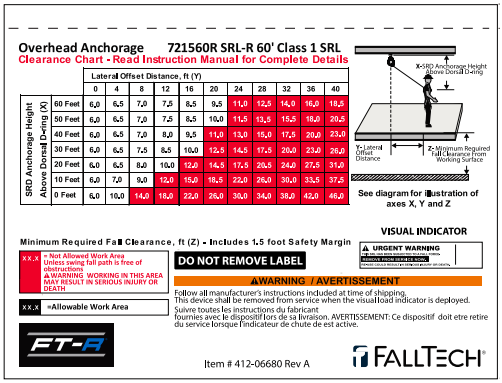

Overhead Anchorage 721560R SRL-R 60' Class 1 SRL

Clearance Chart - Read Instruction Manual for Complete Details

SRD Anchorage Height Above Dorsal D-ring (X)	Lateral Offset Distance, ft (Y) 0	4	8	12	16	20	24	28	32	36	40
60 Feet	6,0	6,5	7,0	7,5	8,5	9,5	11,0	12,5	14,0	16,0	18,5
50 Feet	6,0	6,5	7,0	7,5	8,5	10,0	11,5	13,5	15,5	18,0	20,5
40 Feet	6,0	6,5	7,0	8,0	9,5	11,0	13,0	15,0	17,5	20,0	23,0
30 Feet	6,0	6,5	7,5	8,5	10,0	12,5	14,5	17,5	20,0	23,0	26,0
20 Feet	6,0	6,5	8,0	10,0	12,0	14,5	17,5	20,5	24,0	27,5	31,0
10 Feet	6,0	7,0	9,0	12,0	15,0	18,5	22,0	26,0	30,0	33,5	37,5
0 Feet	6,0	10,0	14,0	18,0	22,0	26,0	30,0	34,0	38,0	42,0	46,0

See diagram for illustration of axes X, Y and Z

Minimum Required Fall Clearance, ft (Z) - Includes 1.5 foot Safety Margin

x.x.x = Not Allowed Work Area Unless swing fall path is free of obstructions. ⚠WARNING WORKING IN THIS AREA MAY RESULT IN SERIOUS INJURY OR DEATH

x.x.x =Allowable Work Area

DO NOT REMOVE LABEL

VISUAL INDICATOR

URGENT WARNING
IF UNIT FAILS INSPECTION, REMOVE FROM SERVICE
SI L'UNITE ECHEC A L'INSPECTION, RETIREZ-LE DU SERVICE

⚠WARNING / AVERTISSEMENT

Follow all manufacturer's instructions included at time of shipping.
This device shall be removed from service when the visual load indicator is deployed.
Suivre toutes les instructions du fabricant fournies avec le dispositif lors de sa livraison. AVERTISSEMENT: Ce dispositif doit etre retire du service lorsque l'indicateur de chute de est active.

FT-R

Item # 412-06680 Rev A

FALLTECH

FallTech

DO NOT REMOVE LABEL
OSHA 1926.502

ANSI Z359.14-2021 Class 1

CSA: See Reverse of Label

SERIAL NUMBER: 1234567

Style#: 721560R

Working Length: 60 Ft

Date of Mfg: DEC 2025

Capacity, Single User: See label on back of unit for user weight range and acceptable tie-off locations

Inspect before each use.

FallTech

Ne Pas Retirer L'étiquette
CSA Z259.2.2-2017, Class SRL-R
Date de fabrication:
Voir le recto de l'étiquette
Numéro de série:
Voir le recto de l'étiquette

Style#: 721560R

Longueur de travail: 18.3m
Max Deployment: 38.0"
Déploiement maximal 1.0m
Inspectez avant chaque utilisation.

WARNING/AVERTISSMENT:
Follow all manufacturer's instructions included at time of shipping
Suivez toutes les instructions du fabricant incluses au moment de l'expédition
Lifeline shall not contact edges or surfaces during fall arrest
La corde d'assurance ne doit pas entrer en contact avec des bords ou des surfaces lors de l'arrêt de chute
This device shall be removed from service when the visual load indicator is deployed
Cet appareil doit être retiré du service lorsque l'indicateur de charge visuel est déployé
Anchor above the user's harness dorsal D-ring
Ancrer au-dessus de l'anneau en D dorsal du harnais de l'utilisateur

MARK OR PUNCH ON DATE GRID:
A) INITIAL IN-SERVICE DATE
B) DATE OF PASSED INSPECTION
MARQUER OU POINCONNER SUR
LA GRILLE DES DATES:
A) DATE DE MISE EN SERVICE INITIALE
B) DATE D'INSPECTION REUSSIE
IF UNIT FAILS INSPECTION, REMOVE FROM SERVICE
SI L'UNITE ECHEC A L'INSPECTION, RETIREZ-LE DU SERVICE

Initials:							
Date:							

8.2 Technora Rope SRL-R Labels

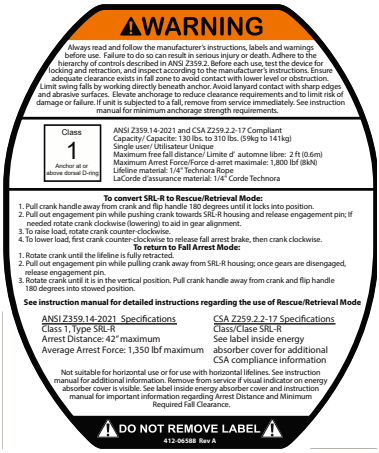

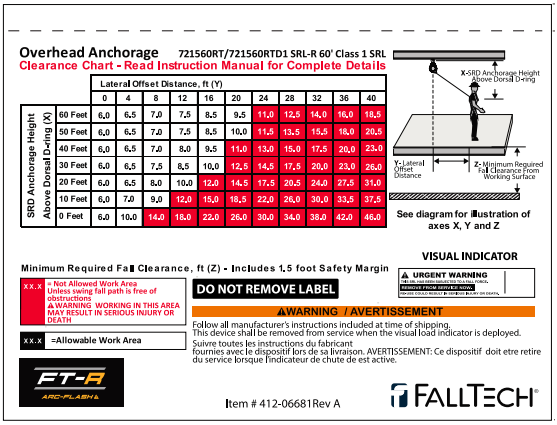

Overhead Anchorage 721560RT/721560RTD1 SRL-R 60' Class 1 SRL

Clearance Chart - Read Instruction Manual for Complete Details

SRD Anchorage Height Above Dorsal D-ring (X)	Lateral Offset Distance, ft (Y) 0	4	8	12	16	20	24	28	32	36	40
60 Feet	6,0	6,5	7,0	7,5	8,5	9,5	11,0	12,5	14,0	16,0	18,5
50 Feet	6,0	6,5	7,0	7,5	8,5	10,0	11,5	13,5	15,5	18,0	20,5
40 Feet	6,0	6,5	7,0	8,0	9,5	11,0	13,0	15,0	17,5	20,0	23,0
30 Feet	6,0	6,5	7,5	8,5	10,0	12,5	14,5	17,5	20,0	23,0	26,0
20 Feet	6,0	6,5	8,0	10,0	12,0	14,5	17,5	20,5	24,0	27,5	31,0
10 Feet	6,0	7,0	9,0	12,0	15,0	18,5	22,0	26,0	30,0	33,5	37,5
0 Feet	6,0	10,0	14,0	18,0	22,0	26,0	30,0	34,0	38,0	42,0	46,0

See diagram for illustration of axes X, Y and Z

Minimum Required Fall Clearance, ft (Z) - Includes 1.5 foot Safety Margin

xx.x = Not Allowed Work Area Unless swing fall path is free of obstructions ⚠WARNING WORKING IN THIS AREA MAY RESULT IN SERIOUS INJURY OR DEATH

xx.x =Allowable Work Area

DO NOT REMOVE LABEL

VISUAL INDICATOR

⚠ URGENT WARNING
DEPLOYED INDICATOR
DO NOT USE UNTIL REPAIRED
REMOVE COVER TO REVIEW DEPLOYED INDICATOR

⚠WARNING / AVERTISSEMENT

Follow all manufacturer's instructions included at time of shipping.
This device shall be removed from service when the visual load indicator is deployed.

Suivre toutes les instructions du fabricant fournies avec le dispositif lors de sa livraison. AVERTISSEMENT: Ce dispositif doit etre retire du service lorsque l'indicateur de chute de est active.

FT-R ARC-FLASH

Item # 412-06681Rev A

FALLTECH

FallTech

DO NOT REMOVE LABEL
OSHA 1926.502
ANSI Z359.14-2021 Class 1
CSA: See Reverse of Label
ASTM F887

SERIAL NUMBER: 1234567

Style#: 721560RT
Working Length: 60 Ft
Date of Mfg: DEC 2025

Capacity, Single User: See label on back of unit for user weight range and acceptable tie-off locations

Inspect before each use.

FallTech

Ne Pas Retirer L'étiquette
CSA Z259.2.2-2017, Class SRL-R
Date de fabrication:
Voir le recto de l'étiquette
Numéro de série:
Voir le recto de l'étiquette

Style#: 721560RT

Longueur de travail: 18.3m
Max Deployment: 38.0"
Déploiement maximal 1.0m
Inspectez avant chaque utilisation.

WARNING/AVERTISSMENT:
Follow all manufacturer's instructions included at time of shipping
Suivez toutes les instructions du fabricant incluses au moment de l'expédition
Lifeline shall not contact edges or surfaces during fall arrest
La corde d'assurance ne doit pas entrer en contact avec des bords ou des surfaces lors de l'arrêt de chute
This device shall be removed from service when the visual load indicator is deployed
Cet appareil doit être retiré du service lorsque l'indicateur de charge visuel est déployé
Anchor above the user's harness dorsal D-ring
Ancrer au-dessus de l'anneau en D dorsal du harnais de l'utilisateur

MARK OR PUNCH ON DATE GRID:
A) INITIAL IN-SERVICE DATE
B) DATE OF PASSED INSPECTION
MARQUER OU POINCONNER SUR LA GRILLE DES DATES:
A) DATE DE MISE EN SERVICE INITIALE
B) DATE D'INSPECTION REUSSIE
IF UNIT FAILS INSPECTION, REMOVE FROM SERVICE
SI L'UNITE ECHEC A L'INSPECTION, RETIREZ-LE DU SERVICE

Initials:							
Date:							

9.0 Definitions

The following are general definitions of fall protection terms as defined by ANSI Z359.0-2012.

Anchorage: A secure connecting point or a terminating component of a fall protection system or rescue system capable of safely supporting the impact forces applied by a fall protection system or anchorage subsystem.

Anchorage Connector: A component or subsystem that functions as an interface between the anchorage and a fall protection, work positioning, rope access or rescue system for the purpose of coupling the system to the anchorage.

Arrest Distance: The total vertical distance required to arrest a fall. The arrest distance includes the deceleration distance and activation distance.

Authorized Person: A person assigned by the employer to perform duties at a location where the person will be exposed to a fall hazard.

Available Clearance: The distance from a reference point, such as the working platform, to the nearest obstruction that an authorized person might contact during a fall which, if struck, could cause injury.

Capacity: The maximum weight that a component, system or subsystem is designed to hold.

Certification: The act of attesting in writing that the criteria established by these standards or some other designated standard have been met.

Certified Anchorage: An anchorage for fall arrest, positioning, restraint or rescue systems that a qualified person certifies to be capable of supporting the potential fall forces that could be encountered during a fall.

Clearance: The distance from a specified reference point, such as the working platform or anchorage of a fall arrest system, to the lower level that a worker might encounter during a fall.

Clearance Requirement: The distance below an authorized person that must remain clear of obstructions in order to ensure that the authorized person does not make contact with any objects that would cause injury in the event of a fall.

Competent Person: An individual designated by the employer to be responsible for the immediate supervision, implementation and monitoring of the employer's managed fall protection program who, through training and knowledge, is capable of identifying, evaluating and addressing existing and potential fall hazards, and who has the employer's authority to take prompt corrective action with regard to such hazards.

Component: An element or integral assembly of interconnected elements intended to perform one function in the system.

Connecting Subsystem: An assembly, including the necessary connectors, comprised of all components, subsystems, or both, between the anchorage or anchorage connector and the harness attachment point.

Connector: A component or element that is used to couple parts of the system together.

Deceleration Distance: The vertical distance between the user's fall arrest attachment at the onset of fall arrest forces during a fall, and after the fall arrest attachment comes to a complete stop.

Energy (Shock) Absorber: A component whose primary function is to dissipate energy and limit deceleration forces which the system imposes on the body during fall arrest.

Fall Arrest: The action or event of stopping a free fall or the instant where the downward free fall has been stopped.

Fall Hazard: Any location where a person is exposed to a potential free fall.

Free Fall: The act of falling before a fall protection system begins to apply forces to arrest the fall.

Free Fall Distance: The vertical distance traveled during a fall, measured from the onset of a fall from a walking working surface to the point at which the fall protection system begins to arrest the fall.

Harness, Full Body: A body support designed to contain the torso and distribute the fall arrest forces over at least the upper thighs, pelvis, chest and shoulders.

Horizontal Lifeline: A component of a horizontal lifeline subsystem, consisting of a flexible line with connectors or other coupling means at both ends for securing it horizontally between two anchorages or anchorage connectors.

Horizontal Lifeline Subsystem: An assembly, including the necessary connectors, comprised of a horizontal lifeline component and, optionally, of: a) An energy absorbing component or, b) A lifeline tensioner component, or both. This subsystem is normally attached at each end to an anchorage or anchorage connector. The end anchorages have the same elevation.

Lanyard: A component consisting of a flexible rope, wire rope or strap, which typically has a connector at each end for connecting to the body support and to a fall arrester, energy absorber, anchorage connector or anchorage.

Lanyard Connecting Subsystem: An assembly, including the necessary connectors, comprised of a lanyard only, or a lanyard and energy absorber.

Personal Fall Arrest System (PFAS): An assembly of components and subsystems used to arrest a person in a free fall.

Positioning: The act of supporting the body with a positioning system for the purpose of working with hands free.

Positioning Lanyard: A lanyard used to transfer forces from a body support to an anchorage or anchorage connector in a positioning system.

Qualified Person: A person with a recognized degree or professional certificate and with extensive knowledge, training and experience in the fall protection and rescue field who is capable of designing, analyzing, evaluating and specifying fall protection and rescue systems.

Self-Retracting Device (SRD): A device that contains a drum wound line that automatically locks at the onset of a fall to arrest the user, but that pays out from and automatically retracts onto the drum during normal movement of the person to whom the line is attached.

Snap Hook: A connector comprised of a hook-shaped body with a normally closed gate or similar arrangement that may be opened to permit the hook to receive an object and, when released, automatically closes to retain the object.

Swing Fall: A pendulum-like motion that occurs during and/or after a vertical fall. A swing fall results when an authorized person begins a fall from a position that is located horizontally away from a fixed anchorage.

APPENDIX A

Table 1A: Specifications for FT-R SRL-R					
Model #	**Lifeline Material**	**Working Length, Weight, and Housing Size**	**Materials and Specifications**	**Capacity and Standards**	**SRL-R**
721560R	7/32" Diameter 7x19 Galvanized Steel Cable	60 ft (18.3 m) 30.6 lbs (13.9 kg) 11" X 11" (279 mm X 279 mm)	Housing: Glass Reinforced Nylon Steel Swivel Snap Hook: 5,000 lbs (22.2 kN) with 3,600 lbs (16 kN) Gate Strength	Single User Capacity: 130 to 310 lbs. (59 to 141 kg) ANSI Z359.14-2021 Class 1 SRL-R OSHA 1926.502 OSHA 1910.140 CSA Z259.2.2-2017 (R2022) Class SRL-R	
721560RT 721560RTD1	1/4" Diameter Technora® Rope	60 ft (18.3 m) 26.4 lbs (12.0 kg) 11" X 11" (279 mm X 279 mm)			

Table 1B: FallTech FT-R Class 1 SRL-R ANSI/OSHA Performance Attributes							
Part #s and Conditions		**Typical FallTech Performance**			**ANSI Performance Requirements**		
Part #	**Anchorage Condition**	**Arrest Distance**	**Average Arrest Force**	**Maximum Arrest Force**	**Maximum Arrest Distance**	**Average Arrest Force** *Conditioned	**Maximum Arrest Force**
721560R	Overhead Non-Leading Edge	33.0" (0.9 m)	925 lbf (4.1 kN)	1,716 lbf (7.6 kN)	42" (1.1 m)	1,575 lbf (7.0 kN)	1,800 lbs (8.0 kN)
721560RT 721560RTD1		31.0" (0.9 m)	903 lbf (4.0 kN)	1,326 lbf (5.9 kN)			

Table 1C: FallTech FT-R SRL-LE CSA Performance Attributes						
Part #s and Conditions			Typical FallTech Performance		CSA Performance Requirements	
Part #	**Anchorage Condition**	**SRD Class**	**Arrest Distance**	**Maximum Arrest Force**	**Maximum Arrest Distance**	**Maximum Arrest Force**
721560R	Overhead Non-Leading Edge Overhead Non-Leading Edge	SRL-R	1.0 m (3.1 ft)	5.9 kN (1,333 lbf)	1.2m (3.9 ft)	8.0 kN (1,800 lbf)
721560RT 721560RTD1			0.9 m (2.9 ft)	5.6 kN (1,265 lbf)		